MERCED COLLEGE GREENHOUSE COMPLEX

GREENHOUSE COMPLEX

IDENTIFICATION STAMP
DIV. OF THE STATE ARCHITECT
APP: 02-121754 INC:
REVIEWED FOR
SS ☐ FLS ☐ ACS ☑
DATE: 02/21/2024

FOR DSA USE ONLY

DSA APP# 02-121754

GENERAL SITE NOTES:

THE REQUIREMENTS AND INFORMATION SET OUT BELOW ARE PROVIDED FOR THE CONTRACTOR'S CONVENIENCE AND DO NOT ENCOMPASS ALL PROJECT REQUIREMENTS DESCRIBED BY THE PROJECT PLANS AND SPECIFICATIONS AND/OR APPLICABLE LAWS, REGULATIONS AND/OR BUILDING CODES.

1. *CONSTRUCTION OF ALL PROJECT SITE IMPROVEMENTS SUBJECT TO ADA ACCESS COMPLIANCE, INCLUDING ACCESSIBLE PATH OF TRAVEL, CURB RETURNS, PARKING STALL(S) AND UNLOADING AREAS, BARRIER FREE AMENITIES AND/OR OTHER APPLICABLE SITE IMPROVEMENTS SHALL CONFORM TO THE AMERICANS WITH DISABILITIES ACT, CALIFORNIA TITLE 24, AND THE CALIFORNIA BUILDING CODE, CURRENT EDITION(S).*
2. *CONTRACTOR SHALL FIELD VERIFY ALL GRADES AND SLOPES PRIOR TO THE PLACEMENT OF CONCRETE AND/OR PAVEMENT FOR CONFORMANCE WITH ADA ACCESS COMPLIANCE REQUIREMENTS. EXAMPLES OF MINIMUM AND MAXIMUM LIMITS RELATED TO ADA ACCESS COMPLIANCE INCLUDE, BUT ARE NOT LIMITED TO:*
   - a) *ACCESSIBLE PATH OF TRAVEL CROSS-SLOPE SHALL NOT EXCEED 2%*
   - b) *ACCESSIBLE PATH OF TRAVEL LONGITUDINAL SLOPES SHALL NOT EXCEED 5%*
   - c) *RAMP LONGITUDINAL SLOPES SHALL NOT EXCEED 8.33%*
   - d) *WALKS SHALL NOT HAVE LESS THAN 48 INCHES IN UNOBSTRUCTED WIDTH*
   - e) *ACCESSIBLE PARKING SPACES AND ACCESS AISLES SHALL NOT EXCEED 2% SLOPE IN ANY DIRECTION*
   - f) *LANDINGS AT THE TOP AND BOTTOM OF ACCESSIBLE RAMPS SHALL NOT EXCEED 2% SLOPE IN ANY DIRECTION*
   - g) *GUTTERS AND ROAD SURFACES DIRECTLY ADJACENT TO AND WITHIN 2 FEET OF A CURB RAMP SHALL HAVE A COUNTER SLOPE NOT TO EXCEED 5%*
   - h) *OPEN PAVED PLAY AREAS SHALL NOT EXCEED 2% IN ANY DIRECTION*
3. *CONTRACTOR MUST IMMEDIATELY NOTIFY THE ENGINEER OF RECORD, IDENTIFIED BY THE PROFESSIONAL ENGINEERING SEAL AND SIGNATURE ON THESE PLANS, OF ANY SITE CONDITION(S) AND/OR DESIGN INFORMATION THAT PREVENTS THE CONTRACTOR FROM COMPLYING WITH THE LAWS, REGULATIONS AND/OR BUILDING CODES GOVERNING ADA ACCESS COMPLIANCE.*
4. *DRAINAGE SHALL NOT BE ALLOWED ONTO ADJACENT PROPERTY.*
5. *ALL FILL MATERIAL USED SHALL BE PLACED IN COMPLIANCE WITH THE PROJECT SPECIFICATIONS. A SOILS COMPACTION REPORT SHALL BE SUBMITTED TO THE ENGINEER OF RECORD AS REQUIRED BY THE PROJECT SPECIFICATIONS.*
6. *THE CONTRACTOR SHALL IMPLEMENT DUST CONTROL MEASURES AS REQUIRED BY THE PROJECT SPECIFICATIONS, AND BY GOVERNING PUBLIC AGENCIES.*
7. *THE CONTRACTOR SHALL LOCATE ALL EXISTING UTILITIES PRIOR TO START OF ANY WORK.*
8. *CONTRACTOR SHALL NOTIFY THE SCHOOL DISTRICT TO TURN OFF IRRIGATION A MINIMUM OF 2 DAYS PRIOR TO STARTING WORK. CONTRACTOR SHALL COORDINATE WITH THE SCHOOL DISTRICT THROUGHOUT THE COURSE OF THE PROJECT FOR WATERING AND NON-WATERING TIMES. CONTRACTOR SHALL NOTIFY THE DISTRICT AS SOON AS WORK IS COMPLETED TO THE POINT WHERE IRRIGATION SYSTEMS MAY BE TURNED BACK ON.*
9. *ENSURE THAT ALL EXISTING STRIPING IS NOT VISIBLE AFTER APPLYING SEAL COAT AND PRIOR TO RESTRIPING AND REPAINTING. OTHERWISE, ADDITIONAL SEAL COAT APPLICATION MAY BE REQUIRED.*
10. *PRIOR TO ACCEPTANCE OF NEW PAVING AND APPLICATION OF SEAL COAT AND/OR STRIPING, THE CONTRACTOR SHALL COMPLETE A WATER TEST OF THE NEW PAVEMENT WITH THE ENGINEER OR RECORD PRESENT TO VERIFY THAT NO LOW SPOTS OR "BIRD BATHS" ARE PRESENT, PER THE PROJECT SPECIFICATIONS.*
11. *LAYOUT ALL PAVEMENT MARKINGS TO MATCH EXISTING UNLESS NOTED OTHERWISE ON PLANS.*
12. *PAINT ALL CURBS AND WHEELSTOPS TO MATCH EXISTING WITHIN PROJECT LIMITS, UNLESS SHOWN OTHERWISE ON THE PLANS*
13. *ALL CONCRETE SHALL HAVE WEAKENED PLANE JOINTS AT 10 FEET OR LESS ON CENTER AND ONE HALF INCH PREMOLDED EXPANSION JOINTS AT 30 FEET OR LESS MINIMUM. MATCH EXISTING SCORE PATTERN DIMENSIONS ON ALL CONCRETE WALKS AND PAVEMENT.*
14. *NO CONCRETE MAY BE POURED UNTIL ALL FORMS AND REINFORCEMENTS HAVE BEEN REVIEWED AND APPROVED BY THE PROJECT INSPECTOR.*
15. *REPLACE ALL DAMAGED TURF AND IRRIGATION FACILITIES RESULTING FROM THE WORK REQUIRED.*
16. *ADJUST ALL UTILITY LIDS TO FINISHED GRADE WITHIN CONSTRUCTION AREA PER DETAIL [E/X100] UNLESS NOTED OTHERWISE. REMOVE AND REPLACE ALL BROKEN OR DAMAGED LIDS AND BOXES. ALL LIDS WITHIN TRAFFIC AREAS SHALL BE TRAFFIC RATED.*
17. *ANY EXISTING UTILITIES AND/OR IMPROVEMENTS WHICH ARE TO REMAIN, THAT BECOME DAMAGED DURING CONSTRUCTION SHALL BE COMPLETELY RESTORED TO THE SATISFACTION OF THE OWNER AND AGENCY HAVING AUTHORITY, AT THE CONTRACTOR'S SOLE EXPENSE.*
18. *ANY EXISTING UTILITIES AND/OR IMPROVEMENTS THAT BECOME DAMAGED DURING CONSTRUCTION SHALL BE COMPLETELY RESTORED TO THE SATISFACTION OF THE OWNER AND AGENCY HAVING AUTHORITY, AT THE CONTRACTOR'S SOLE EXPENSE.*
19. *CONTRACTOR TO MATCH EXISTING PAVEMENT GRADE AT ALL NEW PAVEMENT LOCATIONS UNLESS NOTED OTHERWISE ON THE PLANS.*
20. *ASPHALT CONCRETE REMOVAL AND REPLACEMENT LIMITS SHOWN ARE APPROXIMATE AND ARE BASED ON PAVEMENT CONDITIONS OBSERVED DURING A PRE-DESIGN SITE REVIEW. ADJUST LOCATIONS AND LIMITS AS REQUIRED BY ACTUAL FIELD CONDITIONS OR AS DIRECTED BY THE ENGINEER.*
21. *INSTALL DOWELED CONNECTION AT JOINT OF NEW CONCRETE TO EXISTING CONCRETE PER DETAIL [D/X100]*

GENERAL NOTES:

1. *ALL WORK SHALL BE DONE IN ACCORDANCE WITH THESE CONSTRUCTION DRAWINGS, THE CONTRACT SPECIFICATIONS AND, WHERE APPLICABLE, THE CITY STANDARDS AND THE STATE OF CALIFORNIA STANDARD SPECIFICATIONS.*
2. *THE CONTRACTOR SHALL COORDINATE ALL CONSTRUCTION ACTIVITIES WITH THE SCHOOL DISTRICT'S USE OF THE FACILITIES AND OTHER CONTRACTORS WHO MAY BE DOING CONSTRUCTION WITHIN THE PROJECT SITE.*
3. *THE CONTRACTOR SHALL CONTACT DISTRICT OFFICIALS FOR DETERMINATION OF DEPTH AND LOCATION OF UNDERGROUND UTILITIES PRIOR TO EXCAVATION IN THE PROJECT SITE.*
4. *BEFORE COMMENCING WORK, THE CONTRACTOR SHALL NOTIFY ALL UTILITY AUTHORITIES OR UTILITY COMPANIES HAVING POSSIBLE INTEREST IN THE WORK OF THE CONTRACTOR'S INTENTION TO EXCAVATE PROXIMATE TO EXISTING FACILITIES AND THE CONTRACTOR SHALL VERIFY THE LOCATION OF ANY UTILITIES IN THE WORK AREA, NOTIFY U.S.A. AT 1(800) 642-2444, TWO (2) DAYS PRIOR TO EXCAVATION.*
5. *ALL CONSTRUCTION SHALL CONFORM TO THE REQUIREMENTS OF THE MOST CURRENT CALIFORNIA BUILDING CODE (CBC).*
6. *CHANGES TO THE APPROVED DRAWINGS AND SPECIFICATIONS SHALL BE MADE BY ADDENDA OR CONSTRUCTION CHANGE DOCUMENT (CCD) APPROVED BY DSA, AS REQUIRED BY SECTION 4-338, PART 1, TITLE 24, CCR.*
7. *A "DSA CERTIFIED" CLASS 3 PROJECT INSPECTOR EMPLOYED BY THE DISTRICT (OWNER) AND APPROVED BY DSA SHALL PROVIDE CONTINUOUS INSPECTION OF THE WORK. THE DUTIES OF THE INSPECTOR ARE DEFINED IN SECTION 4-342, PART 1, TITLE 24, CCR.*
8. *A DSA- ACCEPTED TESTING LABORATORY DIRECTLY EMPLOYED BY THE DISTRICT (OWNER) SHALL CONDUCT ALL THE REQUIRED TESTS AND INSPECTIONS FOR THE PROJECT.*
9. *THE INTENT OF THESE DRAWINGS AND SPECIFICATIONS IS THAT THE WORK OF THE ALTERATION, REHABILITATION OR RECONSTRUCTION SHALL BE IN ACCORDANCE WITH TITLE 24, CCR. SHOULD ANY EXISTING CONDITIONS SUCH AS DETERIORATION OR NON-COMPLYING CONSTRUCTION BE DISCOVERED WHICH IS NOT COVERED BY THE CONTRACT DOCUMENTS WHEREIN THE FINISHED WORK WILL NOT COMPLY WITH TITLE 24, CCR, A CONSTRUCTION CHANGE DOCUMENT (CCD), OR A SEPARATE SET OF PLANS AND SPECIFICATIONS, DETAILING AND SPECIFYING THE REQUIRED WORK SHALL BE SUBMITTED TO AND APPROVED BY DSA BEFORE PROCEEDING WITH THE WORK (SECTION 4-317(C), PART 1, TITLE 24, CCR).*
10. *GRADING PLANS, DRAINAGE IMPROVEMENTS, ROAD AND EMERGENCY ACCESS REQUIREMENTS AND ENVIRONMENTAL HEALTH CONSIDERATIONS SHALL COMPLY WITH ALL LOCAL ORDINANCES.*

GENERAL DEMOLITION NOTES:

1. *THE "LIMIT OF DEMOLITION" SHOWN IS APPROXIMATE AND IS GENERALLY CONSIDERED TO BE THE MINIMUM REMOVAL REQUIREMENTS. CONTRACTOR MUST COORDINATE AS NOTED IN THE LEGEND.*
2. *CONTRACTOR SHALL LEGALLY DISPOSE OF ALL DEMOLISHED MATERIALS OFF SITE.*
3. *CONTRACTOR SHALL PROTECT ALL EXISTING UTILITY IMPROVEMENTS NOT SPECIFICALLY DESIGNATED FOR REMOVAL.*
4. *THE ON-SITE UNDERGROUND UTILITIES SHOWN ON THIS SHEET ARE AT APPROXIMATE LOCATIONS. THE EXTENT, LOCATIONS AND SIZES ARE UNKNOWN. THE CONTRACTOR SHALL POTHOLE TO LOCATE AND VERIFY THE UNDERGROUND UTILITY LINES PRIOR TO REMOVAL.*
5. *CONTRACTOR TO PROTECT AND PRESERVE IN PLACE ANY FOUND SURVEY MONUMENTS. ANY MONUMENTS DISTURBED SHALL BE RESET BY A CALIFORNIA LICENSED SURVEYOR AND THE APPROPRIATE PAPERWORK FILED WITH THE CITY OR COUNTY, AT CONTRACTOR'S EXPENSE.*
6. *ALL HAZARDOUS MATERIALS ENCOUNTERED DURING SITE DEMOLITION SHALL BE REMEDIATED AND DISPOSED OF PER STATE AND EPA REQUIREMENTS.*
7. *REMOVE EXISTING IMPROVEMENTS AS NECESSARY TO CONSTRUCT NEW IMPROVEMENTS SHOWN ON THESE PLANS.*
   - a) *FOR CONCRETE REMOVAL, REMOVE TO THE NEXT NEAREST TOOLED JOINT OR EXPANSION JOINT OF IMPROVEMENTS DESIGNATED TO REMAIN.*
   - b) *FOR ASPHALTIC PAVEMENT REMOVAL. SAWCUT TO A STRAIGHT, CLEAN EDGE AT LOCATIONS INDICATED ON THE PLANS.*

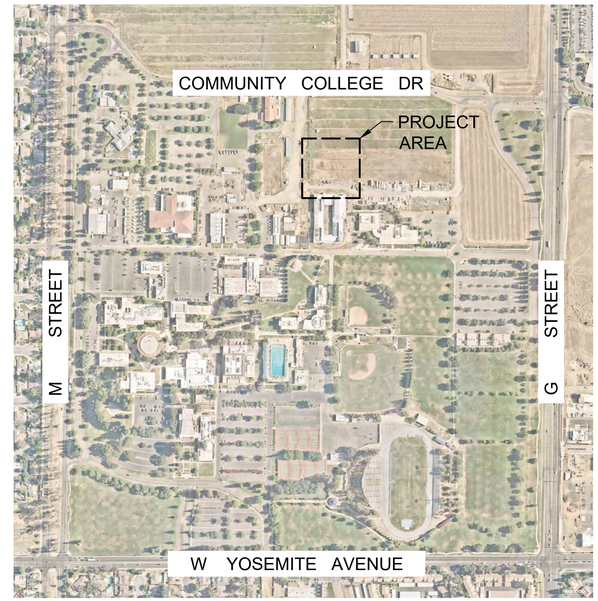

SITE MAP

NOT TO SCALE

SITE ADDRESS:

MERCED COLLEGE
3600 M STREET
MERCED, CA. 95348

PROJECT CONTACTS:

OWNER:	*MARCUS METCALF* *SR. DIRECTOR OF CAPITAL PROJECTS AND FACILITIES* *3600 M STREET* *MERCED CA 95348* *PHONE: (209) 384-6000*
CIVIL ENGINEER:	*BLAIR, CHURCH & FLYNN CONSULTING ENGINEERS* *451 CLOVIS AVE., SUITE 200* *CLOVIS, CA 93612* *PHONE: (559) 326-1400*
ELECTRICAL ENGINEER:	*THOMA ELECTRIC, INC.* *3562 EMPLEO ST.* *SAN LUIS OBISPO, CA 93406* *PHONE: (805) 543-3850*

SCOPE OF WORK:

1. *CONSTRUCTION OF NEW GREENHOUSE COMPLEX INCLUDING: THREE GREENHOUES, TWO LOAFING BARNS, ONE STORAGE SHED, AND ONE DSA PRE-CHECKED SHADE CANOPY*

APPLICABLE CODES:

2022 CALIFORNIA ADMIN. CODE, TITLE 24, PART 1, CCR

2022 CALIFORNIA BUILDING CODE, TITLE 24, PART 2, CCR

TABLE OF CONTENTS

TOTAL SHEET COUNT: 50

CAUTION
WATCH FOR OVERHEAD POWER LINES

811
Know what's below.
Call before you dig.

Blair, Church & Flynn
CONSULTING ENGINEERS

REGISTERED PROFESSIONAL ENGINEER
GARY D. HUNTER
No. 37218
CIVIL
STATE OF CALIFORNIA
Date Signed: 02/13/2024

CONSULTANT
Blair, Church & Flynn Consulting Engineers
451 Clovis Avenue, Suite 200
Clovis, California 93612
Tel (559) 326-1400
Fax (559) 326-1500

REF. & REV.

MERCED COLLEGE GREENHOUSE COMPLEX

GREENHOUSE COMPLEX
COVER SHEET

CONST. DOCUMENTS
DR. BY: AH
CH. BY: ZH
DATE: 02/13/2024
SCALE AS NOTED

C000

Drawing: F:\2022\2121-02\Greenhouse\Greenhouse-C000-Cover Sheet.dwg
Plot by: GVillalobos Feb 21, 2024 - 11:13am

IDENTIFICATION STAMP
DIV. OF THE STATE ARCHITECT
APP: 02-121754 INC:
REVIEWED FOR
SS ☐ FLS ☐ ACS ☑
DATE: 02/21/2024

FOR DSA USE ONLY

DSA APP# 02-121754

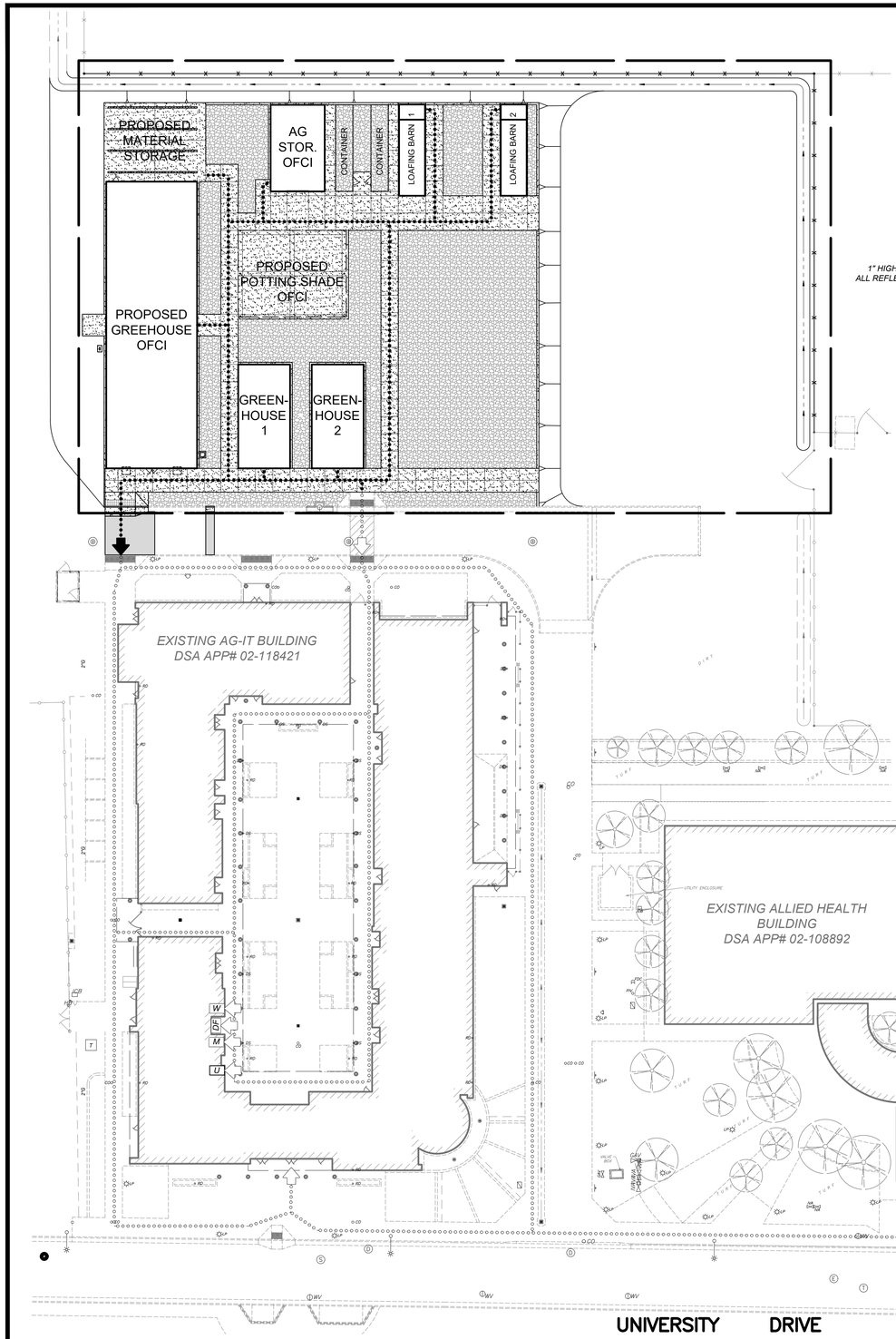

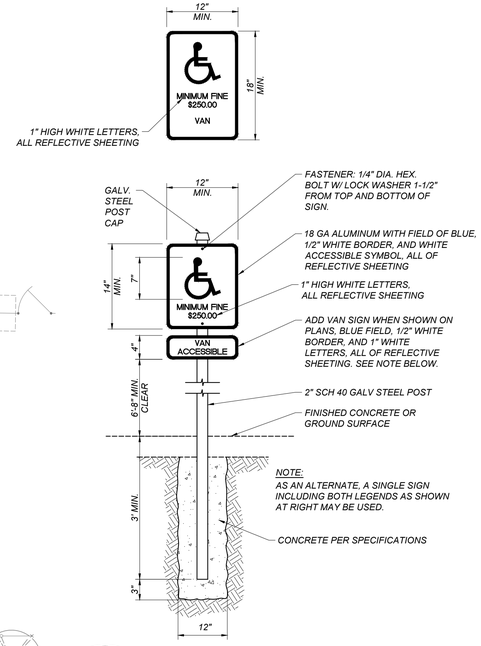

A / C100 ACCESSIBLE PARKING STALL SIGN
NOT TO SCALE

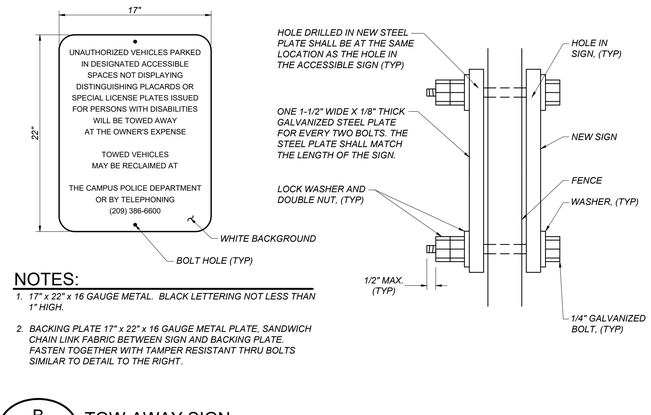

B / C100 TOW-AWAY SIGN
NOT TO SCALE

PARKING CALCULATIONS

LOT#	DSA APP #	STALLS PROVIDED	ACCESSIBLE STALLS PROVIDED	ACCESSIBLE STALLS REQUIRED PER CBC 11-B208.2
A	02-118421	109	5 TOTAL, 1 VAN	5 TOTAL, 1 VAN

NOTES:

1. 17" x 22" x 16 GAUGE METAL. BLACK LETTERING NOT LESS THAN 1" HIGH.
2. BACKING PLATE 17" x 22" x 16 GAUGE METAL PLATE, SANDWICH CHAIN LINK FABRIC BETWEEN SIGN AND BACKING PLATE. FASTEN TOGETHER WITH TAMPER RESISTANT THRU BOLTS SIMILAR TO DETAIL TO THE RIGHT.

SITE LEGEND:

- LIMITS OF WORK
- EXISTING ACCESSIBLE PATH OF TRAVEL
- ACCESSIBLE PATH OF TRAVEL
- DF — EXISTING ACCESSIBLE DRINKING FOUNTAIN PER DSA APP# 02-118421
- W — EXISTING ACCESSIBLE WOMEN'S RESTROOM PER DSA APP# 02-118421
- M — EXISTING ACCESSIBLE MEN'S RESTROOM PER DSA APP# 02-118421
- U — EXISTING ACCESSIBLE UNISEX RESTROOM PER DSA APP# 02-118421
- 1 — CONTRACTOR TO VERIFY THAT TOW AWAY SIGNAGE MEETS THE MINIMUM REQUIREMENTS OF DETAIL [B/C100]. IF SIGNAGE DOES NOT MEET THE MINIMUM REQUIREMENTS, CONTRACTOR SHALL INSTALL NEW SIGNAGE ON EXISTING POST PER DETAIL [B/C100]
- 2 — EXISTING ACCESSIBLE PARKING STALL PER DSA APP# 02-118421
- 3 — CONTRACTOR TO VERIFY THAT PARKING STALL SIGNAGE MEETS THE MINIMUM REQUIREMENTS OF DETAIL [A/C100]. IF SIGNAGE DOES NOT MEET THE MINIMUM REQUIREMENTS, CONTRACTOR SHALL INSTALL NEW SIGNAGE ON EXISTING POST PER DETAIL [A/C100]

NOTES:

1. DESIGN PROFESSIONAL IN GENERAL RESPONSIBLE CHARGE STATEMENT: THE PATH-OF-TRAVEL (P.O.T.) IDENTIFIED IN THESE CONSTRUCTION DOCUMENTS IS COMPLIANT WITH THE CURRENT APPLICABLE CALIFORNIA BUILDING CODE ACCESSIBILITY PROVISIONS FOR PATH OF TRAVEL REQUIREMENTS FOR ALTERATIONS, ADDITIONS AND STRUCTURAL REPAIRS. AS PART OF THE DESIGN OF THIS PROJECT, THE P.O.T. WAS EXAMINED AND ANY ELEMENTS, COMPONENTS OF PORTIONS OF THE P.O.T. THAT WERE DETERMINED TO BE NON-COMPLIANT 1) HAVE BEEN IDENTIFIED AND 2) THE CORRECTIVE WORK NECESSARY TO BRING THEM INTO COMPLIANCE HAS BEEN INCLUDED WITHIN THE SCOPE OF THIS PROJECT'S WORK THROUGH DETAILS, DRAWINGS, AND SPECIFICATIONS INCORPORATED INTO THESE CONSTRUCTION DOCUMENTS. ANY NON-COMPLIANT ELEMENTS, COMPONENTS OR PORTIONS OF THE P.O.T. THAT WILL NOT BE CORRECTED BY THIS PROJECT BASED ON VALUATION THRESHOLD LIMITATIONS OR A FINDING OF UNREASONABLE HARDSHIP ARE SO INDICATED IN THESE CONSTRUCTION DOCUMENTS.

   DURING CONSTRUCTION, IF P.O.T. ITEMS WITHIN THE SCOPE OF THE PROJECT REPRESENTED AS CODE COMPLIANT ARE FOUND TO BE NON-CONFORMING BEYOND REASONABLE CONSTRUCTION TOLERANCES, THEY SHALL BE BROUGHT INTO COMPLIANCE WITH THE CBC AS A PART OF THIS PROJECT BY MEANS OF A CONSTRUCTION CHANGE DOCUMENT.

2. THE ENGINEER HAS SURVEYED/INSPECTED THE PATH OF TRAVEL (P.O.T.) AS INDICATED ON THE PLANS AND HAS FOUND IT TO BE, OR HAS INDICATED ON THE PLANS REMEDIAL WORK WHICH WOULD CAUSE IT TO BE, A BARRIER FREE ACCESSIBLE ROUTE:
   1. AT LEAST 48" IN WIDTH; OR AS APPROVED BY CODE. WITHOUT ABRUPT LEVEL CHANGES EXCEEDING 1/2" IF BEVELED AT 1:2 MAXIMUM SLOPE, OR VERTICAL LEVEL CHANGES EXCEEDING 1/4".
   2. WITH A FIRM, STABLE, AND SLIP RESISTANT WALKING SURFACE; WITH A RUNNING SLOPE OF 1:20 OR LESS, UNLESS OTHERWISE INDICATED, AND A CROSS SLOPE OF 1:48 OR LESS;
   3. IS FREE OF OVERHEAD OBSTRUCTIONS WITHIN 80" ABOVE THE WALKING SURFACE
   4. IS FREE OF OBJECTS WHICH PROTRUDE MORE THAN 4" BETWEEN THE HEIGHTS OF 27" AND 80" ABOVE THE WALKING SURFACE.
3. PASSING SPACES (11B-403.5.3) OF 60"x60" MIN. ARE LOCATED NOT MORE THAN 200' APART. WALKS WITH CONTINUOUS GRADIENTS HAVE 60" IN LENGTH OF LEVEL AREAS (11B-403.7) NOT MORE THAN 400' APART. THERE IS NO DROP-OFF OVER 4" AT THE EDGE OF WALK OR LANDING UNLESS IDENTIFIED BY A GUARD, A HANDRAIL, OR WARNING CURB AT LEAST 6" IN HEIGHT ABOVE THE WALK (11B-303.5).

SCALE: N 1"=30'
0 10 20 30 60
SCALE IN FEET

811 Know what's below. Call before you dig.

Blair, Church & Flynn
CONSULTING ENGINEERS

REGISTERED PROFESSIONAL ENGINEER
JEFFREY D. HOWARD
C 61218
CIVIL
STATE OF CALIFORNIA
02/13/2024
Date Signed

CONSULTANT
Blair, Church & Flynn Consulting Engineers
451 Clovis Avenue, Suite 200
Clovis, California 93612
Tel (559) 326-1400
Fax (559) 326-1500

REF. & REV.

MERCED COLLEGE GREENHOUSE COMPLEX

GREENHOUSE COMPLEX
ACCESS COMPLIANCE PLAN

CONST. DOCUMENTS
DR. BY: AH
CH. BY: ZH
DATE: 02/13/2024
SCALE AS NOTED

C100

Drawing: Z:\2022\22-02\acad\greenhouse\121754_ac-dwg\ Access Compliance.dwg
Plot by: GVillaobos Feb 21, 2024 - 11:12am

IDENTIFICATION STAMP
DIV. OF THE STATE ARCHITECT
APP: 02-121754 INC:
REVIEWED FOR
SS ☐ FLS ☐ ACS ☑
DATE: 02/21/2024

FOR DSA USE ONLY

DSA APP# 02-121754

GENERAL TOPOGRAPHIC SURVEY LEGEND:

(NOT ALL SYMBOLS SHOWN APPEAR ON THE PLANS)

AB	ABUTMENT
AC	ASPHALTIC CONCRETE
ACE	ASPHALTIC CONCRETE EDGE
AD	ASPHALTIC CONCRETE DIKE
AWT	ALL-WEATHER TRACK
BD	BRIDGE DECK
BFC	BOTTOM FACE OF CURB
BGST	STEPS
BGTR	TOP OF ROOF
BGV	BUILDING VENTS
BOD	BOTTOM OF DITCH
BR	BARRICADE
BRK	BRICK
BW	BARRIER WALL
CB	CATCH BASIN
CDA	CONCRETE DRIVE APPROACH
CE	CONCRETE EDGE
CMP	CORRUGATED METAL PIPE
CON	CONCRETE
COTH	COMMUNICATION TRENCH
CR	CROWN OF ROAD
CRQ	QUARTER CROWN
CS	CONCRETE SLAB
CULV	CULVERT
CW	CONCRETE WALL
DD	DOWN DRAIN
DFL	DITCH FLOWLINE
DWY	DRIVEWAY
ECTH	ELECTRICAL TRENCH
EDR	EDGE OF DIRT ROAD
EGR	EDGE OF GRAVEL ROAD
EOD	EDGE OF OILED DIRT
EP	EDGE OF PAVEMENT
ES	EDGE OF SHOULDER
ET	EDGE OF TRAVELED WAY
FF	FINISH FLOOR
FOTH	FIBER OPTIC TRENCH
GB	GRADE BREAK
GFL	GUTTER FLOWLINE
GRA	GRAVEL SPOT SHOT
GRAE	EDGE OF GRAVEL
GSTH	GAS TRENCH
HDR	WOOD HEADER
HW	HEAD WALL
KR	K-RAIL
LIP	LIP OF GUTTER
LSDE	DECOMPOSED GRANITE EDGE
LSDG	DECOMPOSED GRANITE
LSGC	GROUND COVER
LSGF	GOLF COURSE FAIRWAY
LSGG	GOLF COURSE GREEN
LSGT	GOLF COURSE TEE
LSLN	TURF
LSSA	SAND
LSSP	SLOPE PROTECTION
LSST	GOLF COURSE SAND TRAP
LSTF	TURF
NPTH	NON-POTABLE TRENCH
PA	PATIO
PGTH	PROPANE GAS TRENCH
POS	POINT ON SLOPE
RCP	REINFORCED CONCRETE
RIEL	RIPARIAN EDGE OF LAKE
RIEP	RIPARIAN EDGE OF POND
RIES	RIPARIAN EDGE OF STREAM
RIEW	RIPARIAN EDGE OF WETLAND
RIFL	RIPARIAN FLOWLINE
RIMC	RIPARIAN MISC.
RIP	RIP-RAP SLOPE PROTECTION
RK	ROCK
RW	RETAINING WALL
SB	SPEED BUMP
SDCD	STORM DRAIN CROSS DRAIN
SDFL	STORM DRAIN FLOWLINE
SDGR	STORM DRAIN GRATE
SDMG	STORM DRAIN MANHOLE W/ GRATE
SSFL	SEWER FLOWLINE
SDTH	STORM DRAIN TRENCH
SSGT	STORM DRAIN GREASE TRAP
SSST	SEWER TANK (SEPTIC)
SSTH	SEWER TRENCH
SWK	SIDEWALK
SWL	SWALE
TBC	TOP BACK OF CURB
TBW	TOP BACK OF WALK
TF	TOP OF FOOTING
TFC	TOP FACE OF CURB
TFW	TOP FACE OF WALK
TLTH	TELEPHONE TRENCH
TOB	TOP OF BANK
TOE	TOE OF SLOPE
TOP	TOP OF SLOPE
TRDO	TRUNCATED DOMES
TVTH	TV TRENCH
TW	TOP OF WALL
UTH	UNIDENTIFIED TRENCH/SCAR LINE
VGFL	VALLEY GUTTER FLOWLINE
VGR	VALLEY GUTTER
WALBA	BARRIER WALL
WALBW	BLOCK WALL
WALCW	CONCRETE WALL
WALHW	HEAD WALL
WALRW	RETAINING WALL
WALWW	WING WALL
WCR	WHEELCHAIR RAMP
WLPD	WELL PAD
WTTH	WATER TRENCH
WW	WING WALL
(335.21)	EXISTING ELEVATION
AL	ACCENT LIGHT
AV	ALFALFA VALVE
	BACKFLOW ASSEMBLY
	BASKETBALL GOAL
BOV	BLOW-OFF VALVE
	BM=BENCHMARK; OR SBM=SITE BENCHMARK
BO	BOLLARD
CO	CLEANOUT
CO/PB	COMMUNICATION PULLBOX
CVA	COMMUNICATION VAULT
312.55	SURVEY CONTROL MONUMENT
DF	DRINKING FOUNTAIN
DS	DOORSTOP
DW	DRYWELL
EG	ELECTRICAL GROUND
ELC	ELECTRICAL CONDUIT
E	ELECTRICAL METER
EPB	ELECTRICAL PULLBOX
E	ELECTRICAL VAULT LID
ETS	GAS ELECTRONIC TESTING STATION
FDC	FIRE DEPARTMENT CONNECTION
	FIRE HYDRANT
FP	FENCE POST
FPO	FLAG POLE
GAS	GAS LINE; DIAMETER AS SHOWN
G	GAS REGULATOR
GAV	IRRIGATION GATE VALVE
G	GAS METER
GOP	GOAL POST
GP	GUY POLE
4"GR	GRATE; DIAMETER AS SHOWN
GS	GATE STOP
GSR	GAS RISER
GV	GAS VALVE
GRD	GROUNDING ROD
GUY	GUY WIRE
HB	HOSE BIBB
HR	HANDRAIL
ICB	IRRIGATION CONTROLLER
I	IRRIGATION DISTRICT MANHOLE
IVA	IRRIGATION REMOTE CONTROL VALVE
IHB	IN-GROUND HOSE BIBB
IP	IRON PIPE
JP	JOINT UTILITY POLE
LIP	LIGHT POLE
MB	MAIL BOX
MH	MANHOLE
MI	MANUAL IRRIGATION VALVE
MW	MONITORING WELL
PB	PULLBOX
PIV	POST INDICATOR VALVE
	UTILITY STUB
	PARKING METER
4"POST	POST; DIAMETER AS SHOWN
PP	POWER POLE
6" PVC	PVC PIPE; DIAMETER AS SHOWN
QC	QUICK COUPLER VALVE
RD	ROOF DRAIN
RDU	ROOF DRAIN UNDERGROUND
RS	ROOF SUPPORT
	STADIUM LIGHT POLE
D	STORM DRAIN MANHOLE
	SIGN
PPB	SIGNAL LIGHT PUSH BUTTON
	STREET LIGHT
4" SLE	PIPE SLEEVE; DIAMETER AS SHOWN
	SLOPE
SLPB	STREET LIGHT PULLBOX
4"SLV	PIPE SLEEVE; DIAMETER AS SHOWN
S	SEWER MANHOLE
SP	SERVICE POLE
SPB	SIGNAL PULLBOX
	SPRINKLER
4" SPO	STEEL POST; DIAMETER AS SHOWN
12"SS	SAND SEPARATOR; SIZE AS NOTED
24"STP	STAND PIPE; DIAMETER AS NOTED
12"STUMP	TREE STUMP; DIAMETER AS SHOWN
MW	SURVEY MONUMENT WELL
4"TEL	TELEPHONE; DIAMETER AS SHOWN
T	TELEPHONE MANHOLE
TN	TENNIS NET POLE
TP	TELEPHONE POLE
TPB	TELEPHONE PULLBOX
TVPB	TELEVISION PULLBOX
6	TREE; SPREAD SHOWN GRAPHICALLY AND TRUNK DIAMETER AS SHOWN
TSB	TELEPHONE SPLICE BOX
	TRAFFIC SIGNAL POLE
TSPB	TRAFFIC SIGNAL PULLBOX
UP	UTILITY POLE
VB	VACUUM BREAKER
VN	VOLLEYBALL NET POST
2"VP	VENT PIPE; DIAMETER AS SHOWN
WELL	WELL
W	WATER METER
WP	WELL PUMP
6"WPO	CIRCULAR WOOD POST; DIAMETER AS SHOWN
4"X4"WPO	SQUARE WOOD POST; SIZE AS SHOWN
4"W	WATER LINE; DIAMETER AS SHOWN
WV	WATER VALVE
	ASPHALT PAVEMENT
	CONCRETE BLOCK WALL
	EXISTING BUILDING
	CONCRETE
	DETECTABLE WARNINGS
	DG OR GRAVEL
	CHAIN LINK FENCE
	EDGE OF ASPHALT PAVEMENT
	WOOD FENCE
	DIRECTION OF FLOW
E	UNDERGROUND ELECTRIC
G 8"	GAS LINE; SIZE AS NOTED
OE	OVERHEAD ELECTRIC
OT	OVERHEAD TELEPHONE
SD 18"	STORM DRAIN LINE; SIZE AS NOTED
S 12"	SEWER LINE; SIZE AS NOTED
T	UNDERGROUND TELEPHONE
W 8"	WATER LINE; SIZE AS NOTED
AG 12"	AGRICULTURAL IRRIGATION LINE; SIZE AS NOTED
A 1"	AIR LINE; SIZE AS NOTED
C	COMMUNICATION LINE
350	MAJOR GRADE CONTOUR LINE
345	MINOR GRADE CONTOUR LINE
CW 2"	CHILLED WATER LINE; SIZE AS NOTED
CWR 2"	CHILLED WATER RETURN LINE; SIZE AS NOTED
CWS 2"	CHILLED WATER SUPPLY LINE; SIZE AS NOTED
	LIMIT OF DIRT
	LIMIT OF TURF
DL 1"	DRAIN LINE; SIZE AS NOTED
EMS	EMERGENCY MANAGEMENT SYSTEM
FA	FIRE ALARM LINE
F 8"	FIRE LINE; SIZE AS NOTED
FO	FIBER OPTIC LINE
	DRAIN TUBE
HW 2"	HOT WATER LINE; SIZE AS NOTED
HWR 2"	HOT WATER RETURN LINE; SIZE AS NOTED
HWS 2"	HOT WATER SUPPLY LINE; SIZE AS NOTED
HYD	HYDRAULIC LINE
ID 18"	IRRIGATION DISTRICT; SIZE AS NOTED
	IRON FENCE
IRR 3"	IRRIGATION MAIN LINE; SIZE AS NOTED
L 1"	IRRIGATION LATERAL LINE; SIZE AS NOTED
ITS	INTELLIGENT TRAFFIC SYSTEM
JT	JOINTLY TRENCHED UTILITIES
OC	OVERHEAD COMMUNICATIONS LINE
OE	OVERHEAD ELECTRIC LINE
OEC	OVERHEAD ELECTRIC AND COMMUNICATION LINE
OET	OVERHEAD ELECTRIC AND TELEPHONE LINE
OETV	OVERHEAD ELECTRIC AND TELEVISION LINE
OETVT	OVERHEAD ELECTRIC, TELEVISION AND TELEPHONE LINE
OTS	OVERHEAD TRAFFIC SIGNAL LINE
OTV	OVERHEAD TELEVISION LINE
OU	OVERHEAD UTILITY LINE
P 6"	PETROLEUM LINE; SIZE AS NOTED
RWI 3"	RECYCLED WATER IRRIGATION LINE; SIZE AS NOTED
S&SD 8"	SEWER AND STORM DRAIN LINE; SIZE AS NOTED
SFM 6"	SEWER FORCE MAIN; SIZE AS NOTED
ST 2"	STEAM LINE; SIZE AS NOTED
TFO	TRAFFIC FIBER OPTIC LINE
TS	TRAFFIC SIGNAL LINE
TV	TELEVISION LINE
UNK	UNKNOWN UTILITY LINE
X X	WIRE FENCE
	PROPERTY LINE
	CITY LIMIT
	EASEMENT 1
	EASEMENT 2
	RIGHT-OF-WAY LINE
	RIGHT-OF-WAY CENTER LINE
	SETBACK LINE

NOTE:

THIS TOPOGRAPHIC SURVEY LOCATES SPECIFIC PHYSICAL FEATURES OF THE SITE AND THEIR ELEVATION AS DETERMINED NECESSARY BY THE PROJECT ENGINEER. THE INFORMATION SHOWN REFLECTS THE DATA OBTAINED BY FIELD SURVEY CONDUCTED ON JANUARY 23, 2020.

SITE BENCHMARK:

BRASS CAP ON UNIVERSITY DRIVE APPROXIMATELY 148'± SOUTHWEST OF THE ALLIED HEALTH BUILDING WEST

ELEV.= 175.98 NAVD88 DATUM

UTILITY NOTE:

UTILITY INFORMATION SHOWN HEREON IS BASED ON RECORD INFORMATION SUPPLIED TO THE ENGINEER BY UTILITY COMPANIES, PUBLIC AGENCIES AND THE PROPERTY OWNER, TOGETHER WITH OBSERVATION OF VISIBLE EVIDENCE BY A FIELD SURVEY. THE ENGINEER CAN MAKE NO GUARANTEE AS TO THE ACCURACY OR COMPLETENESS OF THE UNDERGROUND UTILITY FACILITIES SHOWN. PRIOR TO ANY SITE EXCAVATIONS, THE CONTRACTOR SHALL CONTACT THE OWNER AND UNDERGROUND SERVICE ALERT (USA) AND REQUEST THAT THEY IDENTIFY THE LOCATION OF ALL UNDERGROUND UTILITIES AT THE SITE.

Blair, Church & Flynn
CONSULTING ENGINEERS

REGISTERED PROFESSIONAL ENGINEER
JERRY D. HOLLINGSWORTH
No. 51218
CIVIL
STATE OF CALIFORNIA
02/13/2024
Date Signed:

CONSULTANT
Blair, Church & Flynn
Consulting Engineers
450 Clovis Avenue,
Suite 200
Clovis, California 93612
Tel (559) 326-1400
Fax (559) 326-1500

REF. & REV.

MERCED COLLEGE GREENHOUSE COMPLEX

GREENHOUSE COMPLEX

TOPOGRAPHIC SURVEY LEGEND

CONST. DOCUMENTS

DR. BY: AH
CH. BY: ZH
DATE: 02/13/2024
SCALE AS NOTED

C101

Drawing: P:\2122\21122\Construction\Drawings\21122\21122_C-Map Topographic Survey.dwg\ref: VEDF.dwt
Plot by: GVillanoba Feb 21, 2024 - 11:13am

IDENTIFICATION STAMP
DIV. OF THE STATE ARCHITECT
APP: 02-121754 INC:
REVIEWED FOR
SS ☐ FLS ☐ ACS ☑
DATE: 02/21/2024

FOR DSA USE ONLY

DSA APP# 02-121754

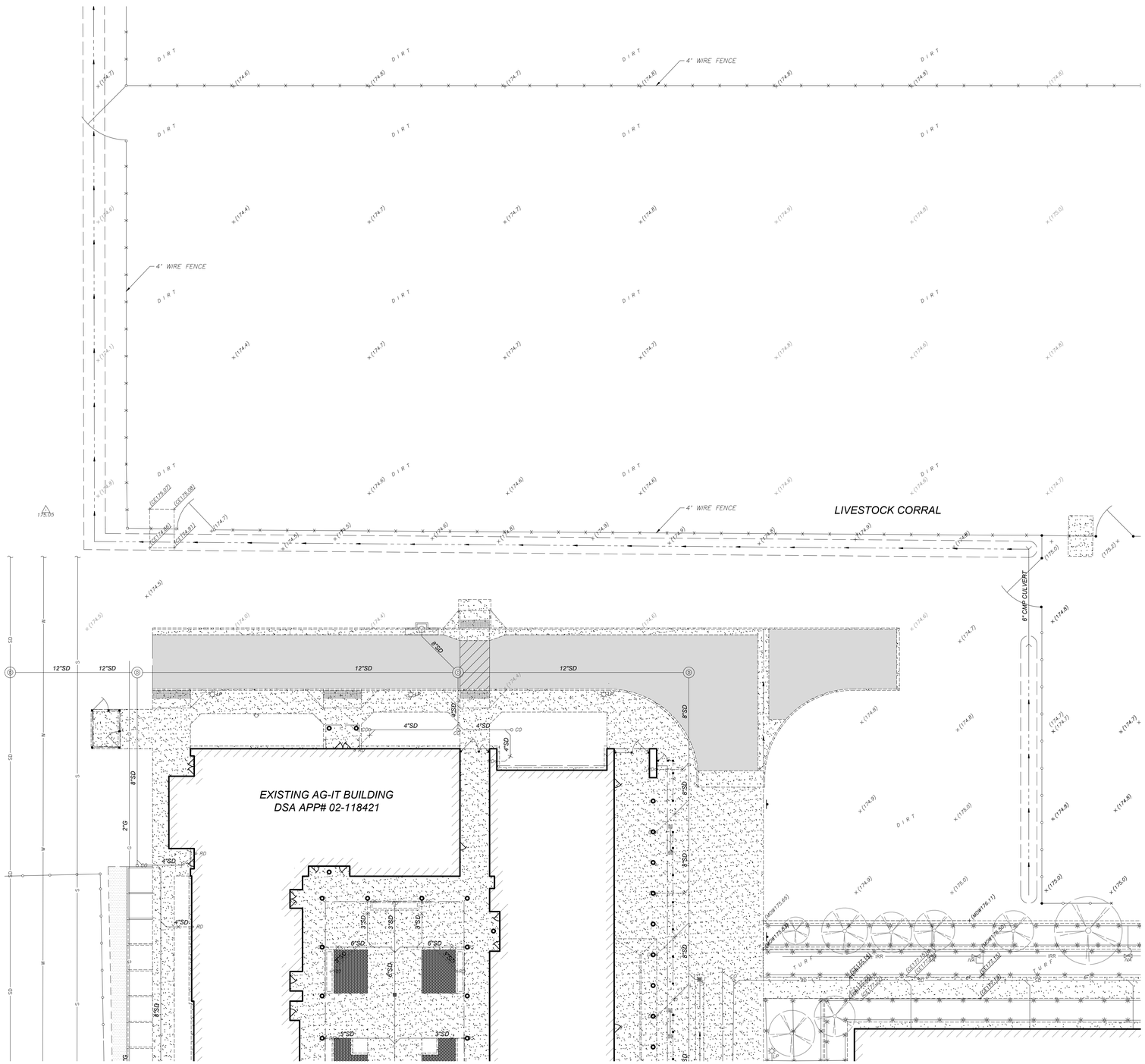

NOTE:

THIS TOPOGRAPHIC SURVEY LOCATES SPECIFIC PHYSICAL FEATURES OF THE SITE AND THEIR ELEVATION AS DETERMINED NECESSARY BY THE PROJECT ENGINEER. THE INFORMATION SHOWN REFLECTS THE DATA OBTAINED BY FIELD SURVEY CONDUCTED ON JANUARY 23, 2020.

SITE BENCHMARK:

BRASS CAP ON UNIVERSITY DRIVE APPROXIMATELY 148'± SOUTHWEST OF THE ALLIED HEALTH BUILDING WEST

ELEV.= 175.98 NAVD88 DATUM

UTILITY NOTE:

UTILITY INFORMATION SHOWN HEREON IS BASED ON RECORD INFORMATION SUPPLIED TO THE ENGINEER BY UTILITY COMPANIES, PUBLIC AGENCIES AND THE PROPERTY OWNER, TOGETHER WITH OBSERVATION OF VISIBLE EVIDENCE BY A FIELD SURVEY. THE ENGINEER CAN MAKE NO GUARANTEE AS TO THE ACCURACY OR COMPLETENESS OF THE UNDERGROUND UTILITY FACILITIES SHOWN. PRIOR TO ANY SITE EXCAVATIONS, THE CONTRACTOR SHALL CONTACT THE OWNER AND UNDERGROUND SERVICE ALERT (USA) AND REQUEST THAT THEY IDENTIFY THE LOCATION OF ALL UNDERGROUND UTILITIES AT THE SITE.

SCALE: N 1"=20'

0 5 20 40
SCALE IN FEET

Blair, Church & Flynn
CONSULTING ENGINEERS

REGISTERED PROFESSIONAL ENGINEER
JEFFREY D. HOLLAND
No. 87218
CIVIL
STATE OF CALIFORNIA
02/13/2024
Date Signed

CONSULTANT
Blair, Church & Flynn
Consulting Engineers
451 Clovis Avenue,
Suite 200
Clovis, California 93612
Tel (559) 326-1400
Fax (559) 326-1500

REF. & REV.

MERCED COLLEGE GREENHOUSE COMPLEX

GREENHOUSE COMPLEX
TOPOGRAPHIC SURVEY

CONST. DOCUMENTS

DR. BY: AH
CH. BY: ZH
DATE: 02/13/2024
SCALE AS NOTED

C102

Drawing: P:\121754\1100\projectdrawings\121754_Ag-Ag Topographic Survey - REF.dwg
Plot by: GVilleabos Feb 21, 2024 - 11:12am

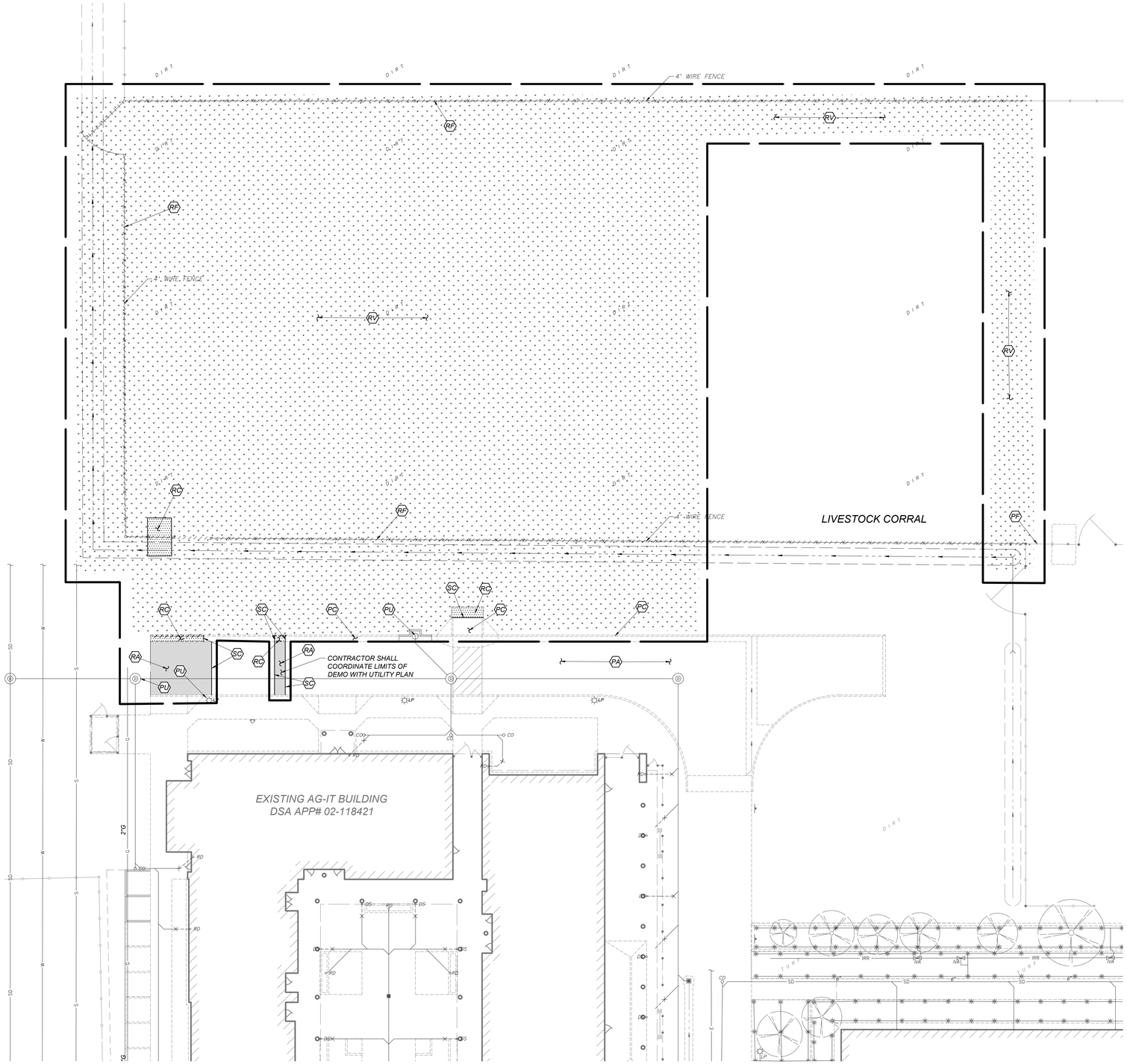

IDENTIFICATION STAMP
DIV. OF THE STATE ARCHITECT
APP: 02-121754 INC:
REVIEWED FOR
SS ☐ FLS ☐ ACS ☑
DATE: 02/21/2024

FOR DSA USE ONLY

DSA APP# 02-121754

GENERAL DEMOLITION NOTES:

1. THE "LIMIT OF DEMOLITION" SHOWN IS APPROXIMATE AND IS GENERALLY CONSIDERED TO BE THE MINIMUM REMOVAL REQUIREMENTS. CONTRACTOR MUST COORDINATE AS NOTED IN THE LEGEND.
2. CONTRACTOR SHALL LEGALLY DISPOSE OF ALL DEMOLISHED MATERIALS OFF SITE.
3. CONTRACTOR SHALL PROTECT ALL EXISTING UTILITY IMPROVEMENTS NOT SPECIFICALLY DESIGNATED FOR REMOVAL.
4. THE ON-SITE UNDERGROUND UTILITIES SHOWN ON THIS SHEET ARE AT APPROXIMATE LOCATIONS. THE EXTENT, LOCATIONS AND SIZES ARE UNKNOWN. THE CONTRACTOR SHALL POTHOLE TO LOCATE AND VERIFY THE UNDERGROUND UTILITY LINES PRIOR TO REMOVAL.
5. CONTRACTOR TO PROTECT AND PRESERVE IN PLACE ANY FOUND SURVEY MONUMENTS. ANY MONUMENTS DISTURBED SHALL BE RESET BY A CALIFORNIA LICENSED SURVEYOR AND THE APPROPRIATE PAPERWORK FILED WITH THE CITY OR COUNTY, AT CONTRACTOR'S EXPENSE.
6. ALL HAZARDOUS MATERIALS ENCOUNTERED DURING SITE DEMOLITION SHALL BE REMEDIATED AND DISPOSED OF PER STATE AND EPA REQUIREMENTS.
7. CONTRACTOR SHALL CONTACT AND COORDINATE WITH ALL UTILITY AGENCIES PRIOR TO THE START OF ANY DEMOLITION OR CONSTRUCTION.
8. ANY EXISTING UTILITIES AND/OR IMPROVEMENTS WHICH ARE TO REMAIN, THAT BECOME DAMAGED DURING CONSTRUCTION SHALL BE COMPLETELY RESTORED TO THE SATISFACTION OF THE OWNER AND AGENCY HAVING AUTHORITY, AT THE CONTRACTOR'S SOLE EXPENSE.
9. REMOVE EXISTING IMPROVEMENTS AS NECESSARY TO CONSTRUCT NEW IMPROVEMENTS SHOWN ON THESE PLANS.
   a) FOR CONCRETE REMOVAL, REMOVE TO THE NEXT NEAREST TOOLED JOINT OR EXPANSION JOINT OF IMPROVEMENTS DESIGNATED TO REMAIN.
   b) FOR ASPHALTIC PAVEMENT REMOVAL, SAWCUT TO A STRAIGHT, CLEAN EDGE AT LOCATIONS INDICATED ON THE PLANS.
10. REFER TO ELECTRICAL PLANS FOR ADDITIONAL DEMOLITION REQUIREMENTS

DEMOLITION LEGEND:

- REMOVE EXISTING IMPROVEMENTS AS NECESSARY TO CONSTRUCT NEW IMPROVEMENTS SHOWN ON THESE PLANS UNLESS OTHERWISE NOTED ON THE PLAN. THE REMOVAL OF IMPROVEMENTS MUST BE COORDINATED WITH ALL PLAN SHEETS. CONTRACTOR MUST ALSO COORDINATE REMOVAL OF IMPROVEMENTS WITH UTILITY AGENCIES. PROTECT ALL IMPROVEMENTS NOT DESIGNATED FOR REMOVAL. SEE NOTE 1
- LIMITS OF VEGETATION REMOVAL. 4" MINIMUM DEPTH
- LIMITS OF ASPHALTIC CONCRETE IMPROVEMENT REMOVAL
- LIMITS OF CONCRETE IMPROVEMENT REMOVAL
- PA — PROTECT ASPHALT CONCRETE PAVEMENT TO REMAIN
- PC — PROTECT CONCRETE IMPROVEMENTS TO REMAIN
- PF — PROTECT FENCE TO REMAIN
- PU — PROTECT UTILITY TO REMAIN
- RA — REMOVE ASPHALT CONCRETE PAVEMENT STRUCTURAL SECTION
- RC — REMOVE CONCRETE IMPROVEMENTS
- RF — REMOVE WIRE FENCES AND GATE
- RV — REMOVE VEGETATION
- SC — SAWCUT
- LIMIT OF WIRE FENCE REMOVAL
- LIMIT OF CONCRETE CURB REMOVAL

SCALE: N 1"=20'

0 5 20 40
SCALE IN FEET

811 Know what's below. Call before you dig.

Blair, Church & Flynn
CONSULTING ENGINEERS

REGISTERED PROFESSIONAL ENGINEER
ROBERT D. ARMSTRONG
No. 87218
CIVIL
STATE OF CALIFORNIA
02/13/2024
Date Signed:

CONSULTANT
Blair, Church & Flynn Consulting Engineers
451 Clovis Avenue, Suite 200
Clovis, California 93612
Tel (559) 326-1400
Fax (559) 325-1500

REF. & REV.

MERCED COLLEGE GREENHOUSE COMPLEX

GREENHOUSE COMPLEX
DEMOLITION PLAN

CONST. DOCUMENTS

DR. BY: AH
CH. BY: ZH
DATE: 02/13/2024
SCALE AS NOTED

C103

Drawing: P:\2021\21-0\Merced-Greenhouse-21031\14_dwg\ Demolition Plan -DCF21.dwg
Plot by: GYlasiosis Feb 21, 2024 - 11:12am

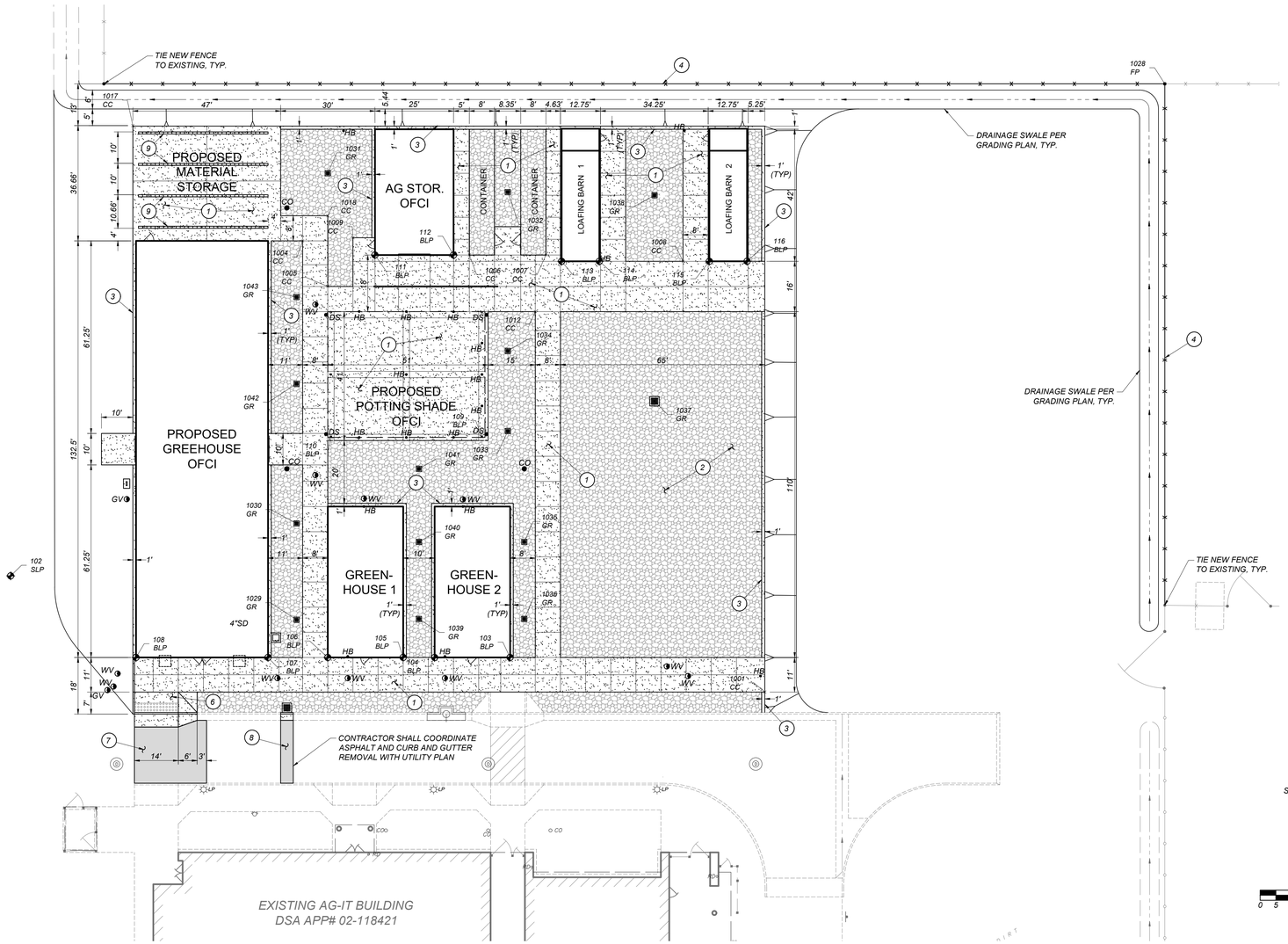

IDENTIFICATION STAMP
DIV. OF THE STATE ARCHITECT
APP: 02-121754 INC:
REVIEWED FOR
SS ☐ FLS ☐ ACS ☑
DATE: 02/21/2024

FOR DSA USE ONLY

DSA APP# 02-121754

GENERAL HORIZONTAL CONTROL NOTES:

1. ALIGNMENT OF THE SITE LAYOUT GRID IS BASED ON AN ASSUMED COORDINATE SYSTEM.
2. SITE LAYOUT POINT 100 IS A BRASS CAP STAMPED "SURVEY MARK" ; FLUSH ON CURB; SOUTH SIDE OF UNIVERSITY DRIVE. APPROXIMATELY 75' EAST OF DRIVE APPROACH, APPROXIMATELY 51' SOUTHEAST OF WATER VALVE. APPROXIMATELY 17.5' SOUTHWEST OF WATER VALVE.
3. SITE LAYOUT POINT 101 IS A CHISELED "X" LOCATED IN CONCRETE SIDEWALK 58'± SOUTHEAST OF THE SOUTHWEST CORNER OF EXISTING STREET LIGHT.
4. SITE LAYOUT POINT 102 IS A NAIL AND TIN LOCATED APPROXIMATELY 31'± NORTHWEST OF THE SOUTHWEST CORNER OF EXISTING 4' WIRE FENCE.
5. DIMENSIONS AND POINTS ARE TO CENTER OF FENCE POSTS, FACE OF BUILDINGS, TOP FACE OF CURB, OR EDGE OF CONCRETE, UNLESS SHOWN OTHERWISE.

HORIZONTAL CONTROL LEGEND:

100 LCP	LAYOUT COORDINATE POINT
100 SLP	SITE LAYOUT POINT
100 BLP	BUILDING LAYOUT POINT
CC	CORNER CONCRETE
FP	FENCE POST
GR	DRAIN INLET GRATE
■	STORM DRAIN INLET, SEE GRADING AND DRAINAGE PLAN

SITE NOTES:

1. ALL CONCRETE MOWSTRIPS, RAMP AND SIDEWALKS SHALL HAVE WEAKENED PLANE JOINTS AT 15 FEET MAXIMUM ON CENTER AND ONE HALF INCH EXPANSION JOINTS AT 45 FEET MAXIMUM ON CENTER PER DETAIL [A/X100]
2. INSTALL DOWELED CONNECTION AT JOINT OF NEW CONCRETE TO EXISTING CONCRETE PER DETAIL [D/X100]
3. NO CONCRETE MAY BE POURED UNTIL THE FORMS HAVE BEEN REVIEWED AND APPROVED BY THE PROJECT INSPECTOR.
4. ALL BURIED METALLIC OBJECTS SHALL HAVE A PROTECTIVE COATING OR BE WRAPPED WITH APPROVED PROTECTIVE WRAP.
5. ADJUST EXISTING SPRINKLER HEADS AND LATERAL LINES AS REQUIRED FOR NEW IMPROVEMENTS.
6. DIMENSIONS ARE TO CENTER OF FENCE POSTS, FACE OF BUILDINGS, FACE OF WALLS OR EDGE OF CONCRETE.
7. 2 WORKING DAYS BEFORE COMMENCING EXCAVATION OPERATIONS WITHIN THE STREET RIGHT-OF-WAY AND/OR UTILITY EASEMENTS, ALL EXISTING UNDERGROUND FACILITIES SHALL HAVE BEEN LOCATED BY UNDERGROUND SERVICES ALERT (USA). CALL 1-800-642-2444
8. ANY SURVEY MONUMENTS WITHIN THE AREA OF CONSTRUCTION SHALL BE PRESERVED OR RESET BY A PERSON LICENSED TO PRACTICE LAND SURVEYING IN THE STATE OF CALIFORNIA

SITE LEGEND:

A / X101	DETAIL DESIGNATION DETAIL REFERENCE SHEET LOCATION
[A/X101]	[DETAIL DESIGNATION / SHEET LOCATION]
	LIMITS OF STANDARD DUTY CONCRETE IMPROVEMENTS
	LIMITS OF ASPHALTIC CONCRETE PAVEMENT STRUCTURAL SECTION
	LIMITS OF DECOMPOSED GRANITE
	LIMITS OF DETECTABLE WARNINGS PER DETAIL [G/X100]
1	CONCRETE SIDEWALK PER DETAIL [A/X100]
2	4" STABILIZED DECOMPOSED GRANITE PER [B/X100]
3	CONCRETE MOWSTRIP PER DETAIL [C/X100]
4	BARBED WIRE WITH ELECTRIC DETERRENT WIRE FENCE TO MATCH EXISTING FENCE
6	ACCESSIBLE CURB RAMP PER DETAIL [F/X100]
7	HEAVY DUTY ASPHALT CONCRETE PAVEMENT PER DETAIL [I/X100]
8	ASPHALT CONCRETE PLUG PER DETAIL [J/X100]
9	MATERIAL STORAGE BAY CONCRETE RETAINING WALL PER DETAIL [K/X100]
10	CONTRACTOR TO VERIFY THAT PARKING STALL SIGNAGE MEETS THE MINIMUM REQUIREMENTS OF DETAIL [A/C100]. IF SIGNAGE DOES NOT MEET THE MINIMUM REQUIREMENTS, CONTRACTOR SHALL INSTALL NEW SIGNAGE ON EXISTING POST PER DETAIL [A/C100]
11	CONTRACTOR TO VERIFY THAT TOW AWAY SIGNAGE MEETS THE MINIMUM REQUIREMENTS OF DETAIL [B/C100]. IF SIGNAGE DOES NOT MEET THE MINIMUM REQUIREMENTS, CONTRACTOR SHALL INSTALL NEW SIGNAGE ON EXISTING POST PER DETAIL [B/C100]

NORTHING EASTING TABLE

POINT	NORTHING	EASTING	ABV	DESCRIPTION
100	1945050.08	6569563.59	SLP	SITE LAYOUT POINT
101	1945052.16	6569403.02	SLP	SITE LAYOUT POINT
102	1945464.64	6569333.71	SLP	SITE LAYOUT POINT
103	1945438.69	6569492.58	BLP	BUILDING LAYOUT POINT
104	1945438.69	6569468.58	BLP	BUILDING LAYOUT POINT
105	1945438.69	6569458.57	BLP	BUILDING LAYOUT POINT
106	1945438.69	6569434.58	BLP	BUILDING LAYOUT POINT
107	1945438.69	6569415.59	BLP	BUILDING LAYOUT POINT
108	1945438.69	6569373.58	BLP	BUILDING LAYOUT POINT
109	1945508.90	6569483.58	BLP	BUILDING LAYOUT POINT
110	1945508.90	6569435.58	BLP	BUILDING LAYOUT POINT
111	1945566.69	6569449.60	BLP	BUILDING LAYOUT POINT
112	1945566.69	6569474.60	BLP	BUILDING LAYOUT POINT
113	1945564.69	6569508.97	BLP	BUILDING LAYOUT POINT
114	1945564.69	6569520.97	BLP	BUILDING LAYOUT POINT
115	1945564.69	6569555.97	BLP	BUILDING LAYOUT POINT
116	1945564.69	6569567.97	BLP	BUILDING LAYOUT POINT
1001	1945427.69	6569573.60	CC	CORNER CONCRETE
1004	1945571.19	6569426.59	CC	CORNER CONCRETE
1005	1945556.69	6569434.58	CC	CORNER CONCRETE

POINT	NORTHING	EASTING	ABV	DESCRIPTION
1006	1945566.69	6569479.61	CC	CORNER CONCRETE
1007	1945566.69	6569503.97	CC	CORNER CONCRETE
1008	1945564.69	6569547.60	CC	CORNER CONCRETE
1009	1945572.19	6569442.58	CC	CORNER CONCRETE
1012	1945548.69	6569500.60	CC	CORNER CONCRETE
1017	1945607.85	6569372.58	CC	CORNER CONCRETE
1018	1945579.19	6569434.58	CC	CORNER CONCRETE
1028	1945621.13	6569700.85	FP	FENCE POST
1029	1945450.69	6569424.65	GR	DRAIN INLET GRATE
1030	1945481.32	6569424.65	GR	DRAIN INLET GRATE
1031	1945592.69	6569434.58	GR	DRAIN INLET GRATE
1032	1945586.69	6569491.85	GR	DRAIN INLET GRATE
1033	1945510.69	6569491.85	GR	DRAIN INLET GRATE
1034	1945536.19	6569491.85	GR	DRAIN INLET GRATE
1035	1945475.44	6569497.09	GR	DRAIN INLET GRATE
1036	1945450.94	6569497.09	GR	DRAIN INLET GRATE
1037	1945520.19	6569538.53	GR	DRAIN INLET GRATE
1038	1945585.69	6569538.53	GR	DRAIN INLET GRATE
1039	1945450.94	6569463.58	GR	DRAIN INLET GRATE
1040	1945475.44	6569463.58	GR	DRAIN INLET GRATE

POINT	NORTHING	EASTING	ABV	DESCRIPTION
1041	1945498.69	6569463.59	GR	DRAIN INLET GRATE
1042	1945525.73	6569424.65	GR	DRAIN INLET GRATE
1043	1945553.31	6569424.65	GR	DRAIN INLET GRATE

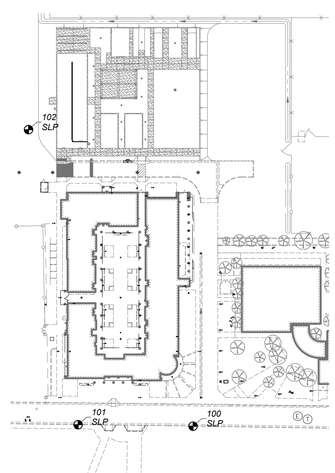

SITE LAYOUT POINTS

811 Know what's below. Call before you dig.

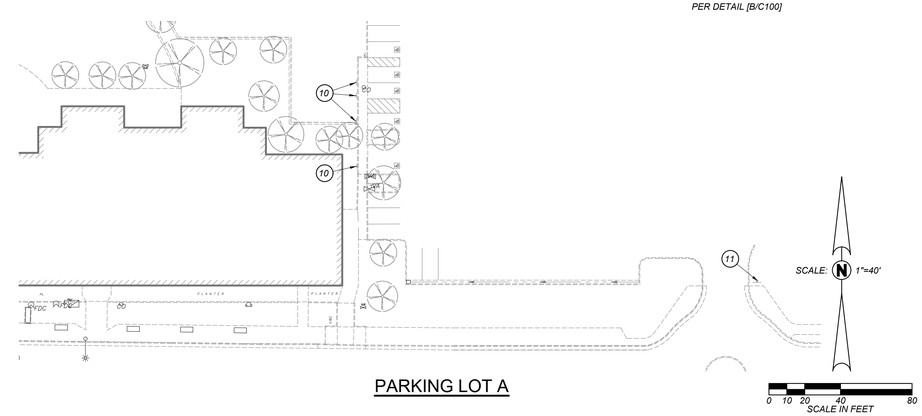

PARKING LOT A

Blair, Church & Flynn
CONSULTING ENGINEERS

REGISTERED PROFESSIONAL ENGINEER
JEFFREY D. HOWARD
No. 81218
CIVIL
STATE OF CALIFORNIA
02/13/2024
Date Signed:

CONSULTANT
Blair, Church & Flynn Consulting Engineers
451 Clovis Avenue, Suite 200
Clovis, California 93612
Tel (559) 326-1400
Fax (559) 326-1500

REF. & REV.

MERCED COLLEGE GREENHOUSE COMPLEX

GREENHOUSE COMPLEX

SITE PLAN & HORIZONTAL CONTROL

CONST. DOCUMENTS

DR. BY: AH
CH. BY: ZH
DATE: 02/13/2024
SCALE AS NOTED

C104

Drawing: P:\2122\2122-02\Greenhouse\greenhouse\2122122-02_C01.dwg; Site Plan - HCP.ctb
Plot By: SVillalobos Feb 21, 2024 - 11:12am

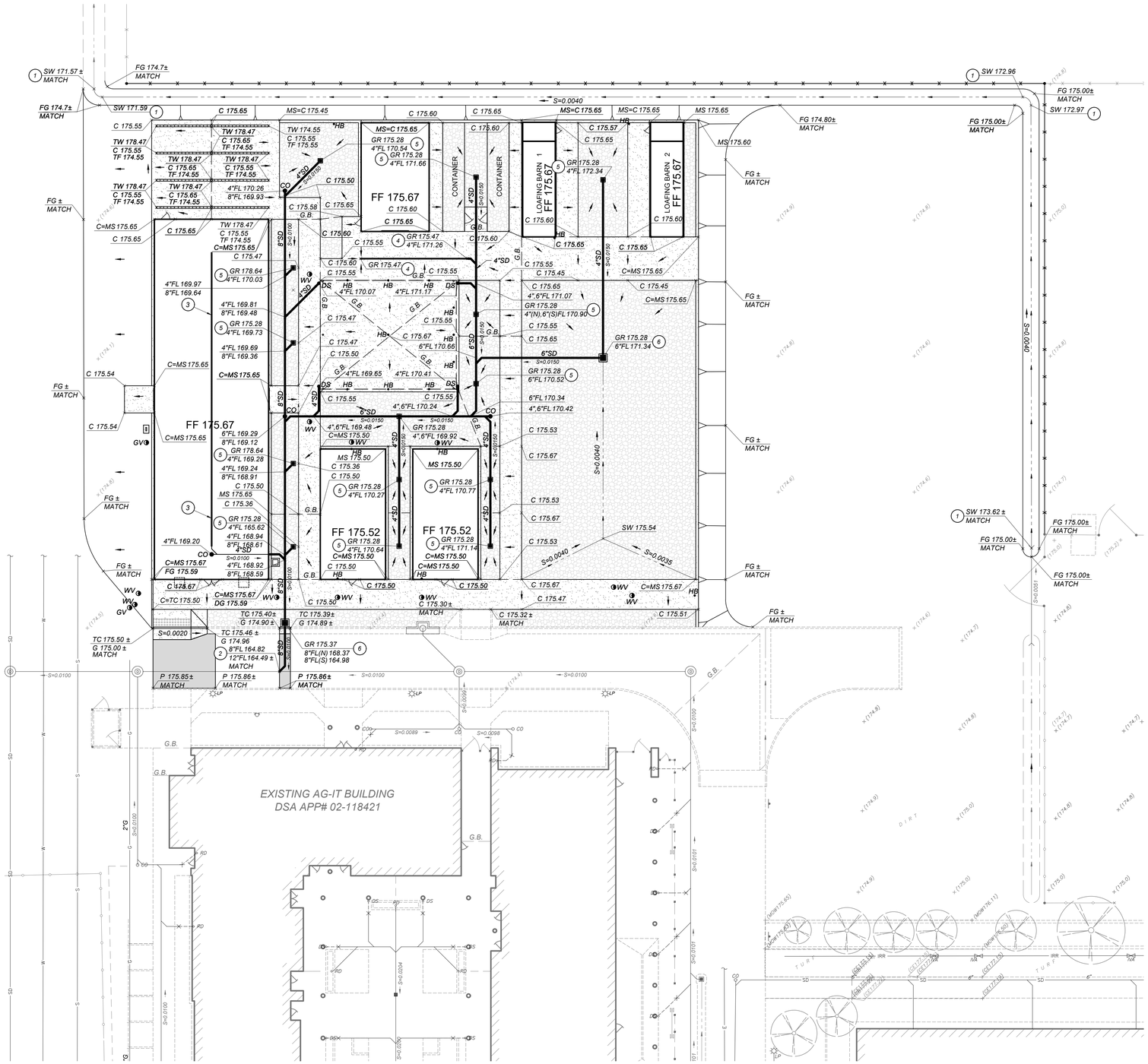

GENERAL GRADING AND DRAINAGE NOTES:

THE REQUIREMENTS AND INFORMATION SET OUT BELOW ARE PROVIDED FOR THE CONTRACTOR'S CONVENIENCE AND DO NOT ENCOMPASS ALL PROJECT REQUIREMENTS DESCRIBED BY THE PROJECT PLANS AND SPECIFICATIONS AND/OR APPLICABLE LAWS, REGULATIONS AND/OR BUILDING CODES.

1. *CONSTRUCTION OF ALL PROJECT SITE IMPROVEMENTS SUBJECT TO ADA ACCESS COMPLIANCE, INCLUDING ACCESSIBLE PATH OF TRAVEL, CURB RETURNS, PARKING STALL(S) AND UNLOADING AREAS, BARRIER FREE AMENITIES AND/OR OTHER APPLICABLE SITE IMPROVEMENTS SHALL CONFORM TO THE AMERICANS WITH DISABILITIES ACT, CALIFORNIA TITLE 24, AND THE CALIFORNIA BUILDING CODE, CURRENT EDITION(S).*
2. *CONTRACTOR SHALL FIELD VERIFY ALL GRADES AND SLOPES PRIOR TO THE PLACEMENT OF CONCRETE AND/OR PAVEMENT FOR CONFORMANCE WITH ADA ACCESS COMPLIANCE REQUIREMENTS. EXAMPLES OF MINIMUM AND MAXIMUM LIMITS RELATED TO ADA ACCESS COMPLIANCE INCLUDE, BUT ARE NOT LIMITED TO:*
   - a) *ACCESSIBLE PATH OF TRAVEL CROSS-SLOPE SHALL NOT EXCEED 2%*
   - b) *ACCESSIBLE PATH OF TRAVEL LONGITUDINAL SLOPES SHALL NOT EXCEED 5%*
   - c) *RAMP LONGITUDINAL SLOPES SHALL NOT EXCEED 8.33%*
   - d) *WALKS SHALL NOT HAVE LESS THAN 48 INCHES IN UNOBSTRUCTED WIDTH*
   - e) *ACCESSIBLE PARKING SPACES AND ACCESS AISLES SHALL NOT EXCEED 2% SLOPE IN ANY DIRECTION*
   - f) *LANDINGS AT THE TOP AND BOTTOM OF ACCESSIBLE RAMPS SHALL NOT EXCEED 2% SLOPE IN ANY DIRECTION*
   - g) *GUTTERS AND ROAD SURFACES DIRECTLY ADJACENT TO AND WITHIN 2 FEET OF A CURB RAMP SHALL HAVE A COUNTER SLOPE NOT TO EXCEED 5%*
3. *CONTRACTOR MUST IMMEDIATELY NOTIFY THE ENGINEER OF RECORD, IDENTIFIED BY THE PROFESSIONAL ENGINEERING SEAL AND SIGNATURE ON THESE PLANS, OF ANY SITE CONDITION(S) AND/OR DESIGN INFORMATION THAT PREVENTS THE CONTRACTOR FROM COMPLYING WITH THE LAWS, REGULATIONS AND/OR BUILDING CODES GOVERNING ADA ACCESS COMPLIANCE.*
4. *GROUND SLOPES AWAY FROM BUILDING PADS IN LANDSCAPED OR DIRT AREAS SHALL BE NO LESS THAN 5% FOR AT LEAST TEN (10) FEET, OR AS OTHERWISE NOTED ON THE PLANS.*
5. *DRAINAGE SHALL NOT BE ALLOWED ONTO ADJACENT PROPERTY.*
6. *ALL FILL MATERIAL USED TO SUPPORT THE FOUNDATIONS OF ANY BUILDING OR STRUCTURE SHALL BE PLACED UNDER THE DIRECTION OF A LICENSED GEOTECHNICAL ENGINEER, AND IN COMPLIANCE WITH THE PROJECT SPECIFICATIONS. A SOILS COMPACTION REPORT SHALL BE SUBMITTED TO THE ENGINEER OF RECORD AS REQUIRED BY THE PROJECT SPECIFICATIONS.*
7. *THE CONTRACTOR SHALL IMPLEMENT DUST CONTROL MEASURES AS REQUIRED BY THE PROJECT SPECIFICATIONS, AND BY GOVERNING PUBLIC AGENCIES.*
8. *THE CONTRACTOR SHALL IMPLEMENT A STORM WATER POLLUTION PREVENTION PLAN (SWPPP) AS REQUIRED BY THE PROJECT SPECIFICATIONS AND THE STATE WATER RESOURCES CONTROL BOARD'S CONSTRUCTION GENERAL PERMIT. IMPLEMENT BMP'S WITHIN THE CITY RIGHT-OF-WAY PER CITY OF MERCED REQUIREMENTS.*
9. *AS A FIRST ORDER OF WORK, THE CONTRACTOR SHALL POT HOLE THE EXISTING UTILITY LINES AT THE POINT OF CONNECTION TO VERIFY THE LOCATION, SIZE, PIPE MATERIAL AND ELEVATION SO THAT THE ENGINEER CAN MAKE ELEVATION AND/OR ALIGNMENT ADJUSTMENTS IF NECESSARY. THE CONTRACTOR SHALL ALSO POT HOLE WHERE PROPOSED UTILITIES ARE SHOWN TO CROSS OR BE PROXIMATE TO EXISTING UTILITIES. NOTIFY THE ENGINEER OF ANY CONFLICTS AND OBTAIN DIRECTION BEFORE PROCEEDING.*
10. *ADJUST UTILITY LIDS WITHIN NEW CONSTRUCTION AREA TO FINISHED GRADE PER DETAIL [E/X100]. REPLACE ALL BROKEN LIDS WITH NEW. PROVIDE TRAFFIC RATED LIDS WITHIN VEHICLE LOADING AREAS.*
11. *CONTRACTOR TO WATER TEST PAVEMENT WITHIN NEW IMPROVEMENT AREA. CONTRACTOR TO REPLACE PAVEMENT WHERE BIRD BATHS OCCUR AFTER TEST AS DIRECTED BY THE INSPECTOR OR ENGINEER.*

GRADING LEGEND:

C	CONCRETE
FF	FINISHED FLOOR
G	GUTTER
MS	MOWSTRIP
P	PAVEMENT
SW	SWALE
TC	TOP OF CURB
TW	TOP OF WALL
(344.9)	EXISTING ELEVATION
C328.78	NEW FINISHED GRADE
	DIRECTION OF DRAINAGE
	BUILDING OVER-EXCAVATION LIMITS; SEE DETAIL [H/X100]; BUILDING OVER-EXCAVATION SHALL EXTEND THROUGH THE ENTIRE COURTYARD AS WELL AS UNDER THE BUILDING FOOTPRINT
G.B.	GRADE BREAK
	LIMITS OF GRADING
S=0.0050	PIPE SLOPE AND DIRECTION OF FLOW
	SWALE
6"SD	PVC STORM DRAIN PIPELINE; SIZE AS NOTED. TRENCH AND BACKFILL PER [G/X200]
S=0.0020	FLOWLINE SLOPE AND DIRECTION OF FLOW
	U23 STORM DRAIN INLET
	V12 STORM DRAIN INLET
1	CORRAL IRRIGATION DRAINAGE DITCH
2	CONNECT TO EXISTING STORM DRAIN WITH WATER-TIGHT CONNECTION
3	MAIN GREENHOUSE TRENCH DRAIN SYSTEM, REFER TO ARCHITECTURAL PLANS
4	TRENCH DRAIN PER [D/A600]
5	INSTALL V12 STORM DRAIN INLET PER DETAIL [F/X200]
6	INSTALL U23 STORM DRAIN INLET PER DETAIL [H/X200]
●CO	SURFACE CLEANOUT PER [C/X200]

SCALE: N 1"=20'

0 5 20 40
SCALE IN FEET

811 Know what's below. Call before you dig.

Blair, Church & Flynn
CONSULTING ENGINEERS

REGISTERED PROFESSIONAL ENGINEER
JERRY D. HOLT
No. 51218
CIVIL
STATE OF CALIFORNIA
02/13/2024
Date Signed:

CONSULTANT
Blair, Church & Flynn
Consulting Engineers
451 Clovis Avenue,
Suite 200
Clovis, California 93612
Tel (559) 326-1400
Fax (559) 326-1500

REF. & REV.

MERCED COLLEGE GREENHOUSE COMPLEX

GREENHOUSE COMPLEX

GRADING PLAN

CONST. DOCUMENTS

DR. BY: AH
CH. BY: ZH
DATE: 02/13/2024
SCALE AS NOTED

C105

Drawing: P:\2022\2012\Greenhouse\greenhouse\222012_Cp01Hosp_Grading Plan - NCP.dwg
Plot by: DVillaobos Feb 21, 2024 - 11:13am

IDENTIFICATION STAMP
DIV. OF THE STATE ARCHITECT
APP: 02-121754 INC:
REVIEWED FOR
SS ☐ FLS ☐ ACS ☑
DATE: 02/21/2024

FOR DSA USE ONLY

DSA APP# 02-121754

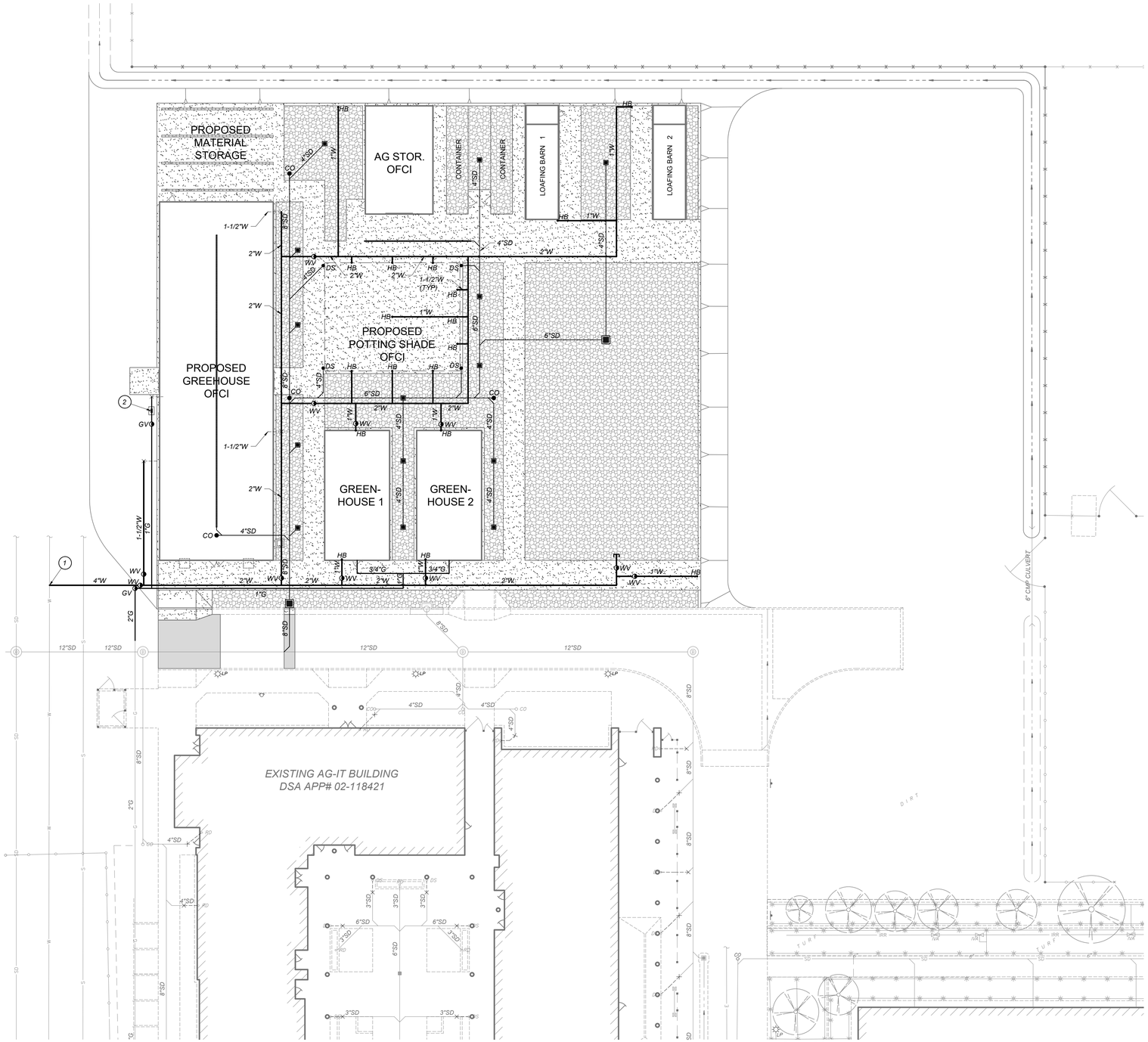

GENERAL SITE UTILITY NOTES:

1. AS FIRST ORDER OF WORK, CONTRACTOR SHALL POTHOLE EXISTING UTILITIES AND NOTIFY ENGINEER IMMEDIATELY OF LOCATIONS, SIZE AND DEPTH.
2. THE CONTRACTOR SHALL FIELD VERIFY THE EXACT LOCATION, SIZE, DEPTH, AND TYPE OF ALL EXISTING UTILITIES AND INTERFERENCES SITUATED ALONG THE ROUTE OF THE PROPOSED CONSTRUCTION PRIOR TO COMMENCEMENT OF EXCAVATION, FABRICATION, AND INSTALLATION. THE CONTRACTOR SHALL CONSTRUCT ALL IMPROVEMENTS IN SUCH A MANNER AS WILL PROTECT ALL EXISTING UNDERGROUND UTILITIES AND, IN THE EVENT OF ANY CONFLICTS, SHALL NOTIFY THE ENGINEER BEFORE PROCEEDING.
3. SEE IRRIGATION PLANS FOR PROPOSED IRRIGATION PIPE ALIGNMENT.
4. COORDINATE EXACT POINTS OF CONNECTION TO PLUMBING BY OTHERS AND NOTIFY THE ENGINEER OF ANY CONFLICT SO THAT ADJUSTMENTS CAN BE MADE IF NEEDED.
5. SAWCUT EXISTING CONCRETE IMPROVEMENTS AS NECESSARY TO INSTALL NEW WATER OR SEWER IMPROVEMENTS. CONSTRUCT NEW CONCRETE IMPROVEMENTS TO MATCH ADJACENT CONCRETE IMPROVEMENTS AND JOIN TOGETHER WITH DOWEL BARS PER DETAIL [D/X100]
6. INSTALLATION, TYPE, AND MANUFACTURER'S MODELS OF DOMESTIC WATER METERS, DRAIN INLETS/OUTLETS AND OTHER APPURTENANCES OF SITE UTILITY SYSTEMS SHALL BE DONE IN STRICT ACCORDANCE WITH GOVERNING AUTHORITY REQUIREMENTS.
7. LAYOUT OF MATERIALS, EQUIPMENT AND SYSTEMS IS GENERALLY DIAGRAMMATIC UNLESS SPECIFICALLY DIMENSIONED. SOME WORK MAY BE SHOWN OFFSET FOR CLARITY. THE ACTUAL LOCATIONS OF ALL MATERIALS, PIPING, FIXTURES, EQUIPMENT, SUPPORTS, ETC., SHALL BE CAREFULLY PLANNED PRIOR TO INSTALLATION OF ANY WORK TO AVOID ALL INTERFERENCES WITH EACH OTHER OR WITH STRUCTURAL, ELECTRICAL, PLUMBING AND MECHANICAL, ARCHITECTURAL OR ANY OTHER ELEMENTS. ALL CONFLICTS SHALL BE CALLED TO THE ATTENTION OF THE ARCHITECT AND THE ENGINEER PRIOR TO THE INSTALLATION OF ANY WORK OR THE ORDERING OF ANY EQUIPMENT.
8. ANY INSPECTION TO BE MADE BY THE PROJECT INSPECTOR SHALL REQUIRE A MINIMUM OF 24 HOUR NOTICE.
9. PRESSURE TESTS AND PURITY TESTS ARE REQUIRED ON ALL WATER SYSTEM INSTALLATIONS. CONTRACTOR TO COORDINATE WITH THE AUTHORITY HAVING JURISDICTION.
10. IF THE TOP OF THE STEM OF ANY WATER GATE VALVE IS DEEPER THAN 4' BELOW FINISHED PAVEMENT GRADE, THE CONTRACTOR SHALL INSTALL A STEM EXTENSION SO THAT THE TOP OF THE STEM, WITH EXTENSION, SHALL BE NO DEEPER THAN 4' NOR SHALLOWER THAN 2' FROM FINISHED GRADE.
11. BACKFILL UTILITY TRENCHES PER DETAIL [G/X200]
12. ADJUST EXISTING UTILITY LIDS TO FINISHED GRADE PER UTILITY COMPANY STANDARDS AND DETAIL [E/X100] AND INSTALL TRAFFIC RATED LIDS WHERE LOCATED IN A TRAFFIC AREA.

UTILITY LEGEND:

6"W	CLASS 200 NOTED ON PLAN. THRUST BLOCKS PER DETAIL [A/X200]. PIPE BEDDING AND BACKFILL PER DETAIL [G/X200]
6"SD	STORM DRAIN PIPE, SEE GRADING PLAN
G	GAS LINE
•HB	HOSE BIBB PER DETAIL [D/X200]
WV	WATER VALVE PER [B/X200]
GV	GAS SHUT-OFF VALVE PER [A/X201]
	CAP END OF UTILITY LINE.
1	CONNECT TO EXISTING WATER LINE WITH WATER- TIGHT CONNECTION.
2	GAS PRESSURE REGULATOR VALVE PER [B/X201]

SCALE: N 1"=20'

0 5 20 40
SCALE IN FEET

811 Know what's below. Call before you dig.

Blair, Church & Flynn
CONSULTING ENGINEERS

REGISTERED PROFESSIONAL ENGINEER
RANDY D. HOLDER
No. 67218
CIVIL
STATE OF CALIFORNIA
02/13/2024
Date Signed

CONSULTANT
Blair, Church & Flynn Consulting Engineers
451 Clovis Avenue, Suite 200
Clovis, California 93612
Tel (559) 326-1400
Fax (559) 326-1500

REF. & REV.

MERCED COLLEGE GREENHOUSE COMPLEX

GREENHOUSE COMPLEX
UTILITY PLAN

CONST. DOCUMENTS

DR. BY: AH
CH. BY: ZH
DATE: 02/13/2024
SCALE AS NOTED

C106

Drawing: P:\2022\121630\acad\construction\121754_C-001 Util Utility Plan .DWG
Plot by: GVilleabos Feb 21, 2024 - 11:13am

IDENTIFICATION STAMP
DIV. OF THE STATE ARCHITECT
APP: 02-121754 INC:
REVIEWED FOR
SS ☐ FLS ☐ ACS ☑
DATE: 02/21/2024

FOR DSA USE ONLY

DSA APP# 02-121754

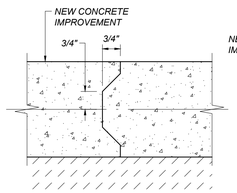

CONSTRUCTION JOINT

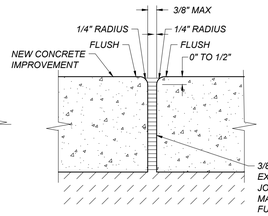

EXPANSION JOINT

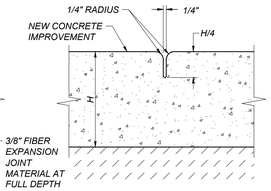

WEAKENED PLANE JOINT

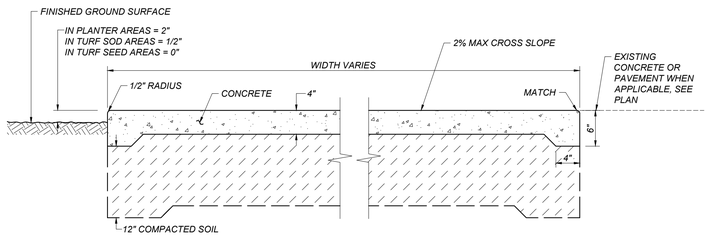

A X100 REGULAR-DUTY CONCRETE
NOT TO SCALE

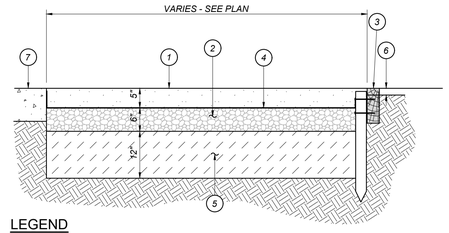

LEGEND

1. STABILIZED DECOMPOSED GRANITE SURFACE. SEE SPECIFICATIONS FOR MATERIALS AND METHODS. CONTRACTOR TO SUBMIT SAMPLE FOR APPROVAL.
2. 3/4" MAX TYPE 2 AGGREGATE BASE, COMPACTED TO 95%.
3. COMPOSITE WOOD 2x4 HEADER WITH BEVELED JOINTS. SECURE WITH METAL STAKES AT 6' O.C. AND AT EACH SIDE OF JOINT OR CORNER.
4. NON-WOVEN GEOTEXTILE FABRIC, MINIMUM 4.0 OZ/SY. WRAP UP 1.5" HIGH ON ALL SIDES OF HEADER.
5. SUBGRADE. SCARIFY TO A DEPTH OF 12" MOISTURE CONDITION AND RECOMPACT TO 95% RELATIVE DENSITY.
6. FINISH GRADE IN PLANTING AREA SHALL BE 2" BELOW TOP OF HEADER FOR MULCH, 0.5" BELOW FOR TURF SOD, FLUSH FOR TURF SEED OR STOLONS.
7. ADJACENT PAVED SURFACE OR CURB. WHERE DG IS ADJACENT TO WALKABLE SURFACE, TOP OF DG IS TO BE LEVEL WITH PAVEMENT'S FINISH SURFACE.

B X100 STABILIZED DECOMPOSED GRANITE SURFACE
NOT TO SCALE

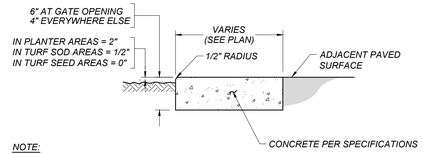

NOTE:

WHERE MOWSTRIP IS ADJACENT TO OR IN A VEHICULAR PATH, PROVIDE 2 EVENLY SPACED, CONTINUOUS #4 REBAR WITH #4 REBAR AT 36" O.C. PERPENDICULAR TO THE LONGITUDINAL AXIS OF THE MOWSTRIP

C X100 CONCRETE MOWSTRIP
NOT TO SCALE

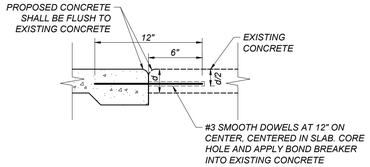

D X100 DOWEL BAR DETAIL
NOT TO SCALE

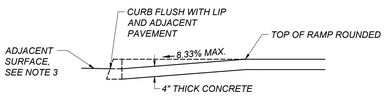

SECTION A-A

NOTES:

1. RAMP LONGITUDINAL SLOPES SHALL NOT EXCEED 8.33%, RAMP CROSS SLOPES SHALL NOT EXCEED 2%.
2. LANDINGS AT THE TOP AND BOTTOM OF ACCESSIBLE RAMPS SHALL NOT EXCEED 2% IN ANY DIRECTION.
3. GUTTERS AND ROAD SURFACES DIRECTLY ADJACENT TO AND WITHIN 2 FEET OF A CURB RAMP MAY HAVE A COUNTER SLOPE NOT EXCEEDING 5%.

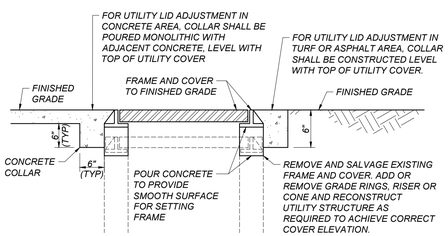

E X100 ADJUST UTILITY LID
NOT TO SCALE

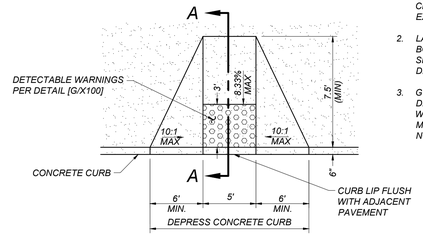

PLAN

F X100 CONCRETE CURB RAMP
NOT TO SCALE

NOTES:

1. THE DETECTABLE WARNING SURFACE SHALL BE YELLOW AND APPROXIMATE FS 33538 OF SAE AMSSTD-595A.
2. WHERE DETECTABLE WARNING SURFACE DOES NOT PROVIDE A 70% CONTRAST WITH ADJACENT WALKING SURFACES, A 1-INCH WIDE MINIMUM VISUALLY CONTRASTING SURFACE SHALL SEPARATE THE DETECTABLE WARNING FROM THE ADJACENT SURFACE.
3. THE DOMES SHALL BE MANUFACTURED BY ARMOR TILE INC. OR APPROVED EQUAL.
4. ONLY APPROVED DSA/AC DETECTABLE WARNING PRODUCTS AND DIRECTIONAL SURFACES SHALL BE INSTALLED AS PROVIDED IN THE CALIFORNIA CODE OF REGULATIONS (CCR), TITLE 24, PART 1, CHAPTER 5, ARTICLES 2, 3 AND 4.

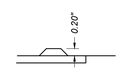

SECTION

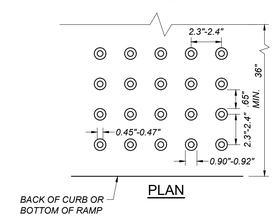

PLAN

G X100 DETECTABLE WARNINGS
NOT TO SCALE

WALL AND FOOTING DIMENSIONS		
RETAINING HEIGHT "H"	W	D
3'-11" MAX.	3'-6"	1'-4"

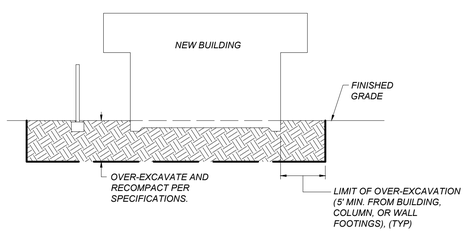

H X100 OVER-EXCAVATION DETAIL
NOT TO SCALE

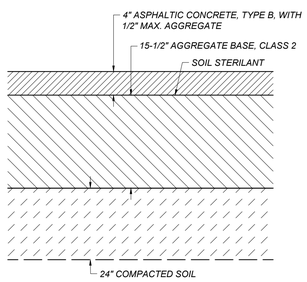

HEAVY DUTY

I X100 HEAVY DUTY ASPHALT CONCRETE PAVEMENT
NOT TO SCALE

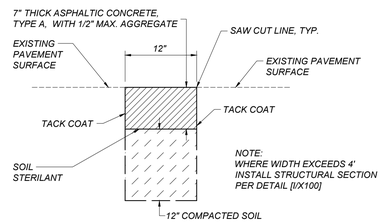

NOTE:
WHERE WIDTH EXCEEDS 4' INSTALL STRUCTURAL SECTION PER DETAIL [I/X100]

J X100 ASPHALT CONCRETE PLUG
NOT TO SCALE

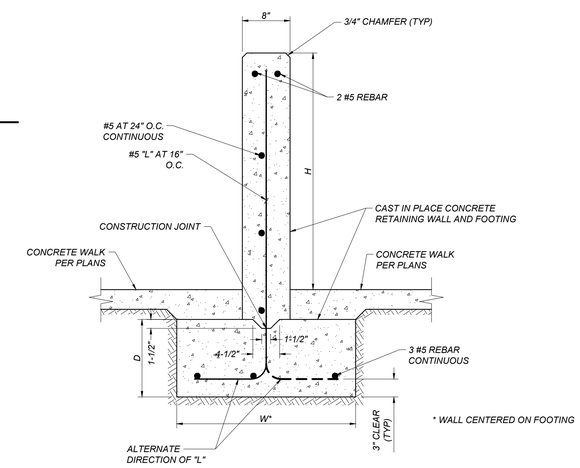

* WALL CENTERED ON FOOTING

K X100 MATERIAL STORAGE BAY CONCRETE RETAINING WALL
NOT TO SCALE
NOTE: THIS WORK IS EXEMPT FROM DSA STRUCTURAL SAFETY AND FIRE LIFE SAFETY REVIEW PER DSA IR A-22 SECTION 1.2.1

Blair, Church & Flynn
CONSULTING ENGINEERS

REGISTERED PROFESSIONAL ENGINEER
GARY D. HUNTER
No. 57218
CIVIL
STATE OF CALIFORNIA
02/13/2024
Date Signed:

CONSULTANT
Blair, Church & Flynn Consulting Engineers
4551 Clovis Avenue, Suite 200
Clovis, California 93612
Tel (559) 326-5400
Fax (559) 326-1500

REF. & REV.

MERCED COLLEGE GREENHOUSE COMPLEX

GREENHOUSE COMPLEX
SITE DETAILS

CONST. DOCUMENTS

DR. BY: AH
CH. BY: ZH
DATE: 02/13/2024
SCALE AS NOTED

X100

IDENTIFICATION STAMP
DIV. OF THE STATE ARCHITECT
APP: 02-121754 INC:
REVIEWED FOR
SS ☐ FLS ☐ ACS ☑
DATE: 02/21/2024

FOR DSA USE ONLY

DSA APP# 02-121754

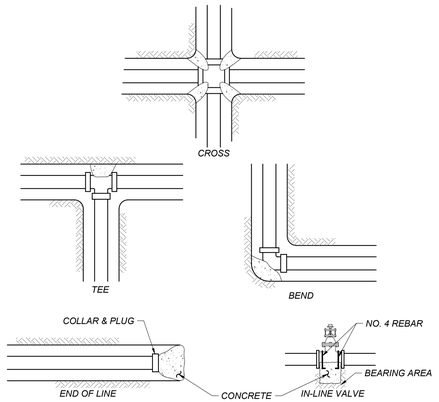

Table Of Bearing Areas Required (In Square Feet)*					
Pipe Diameter	4" Or Smaller	6"	8"	10"	12"
Cross, Tee, 90° Bend, Plug, Hydrant, Valve	6.3	13.2	22.7	34.2	48.3
45° Bend	3.4	7.1	12.3	18.5	26.1
22 1/2° Bend	1.7	3.6	9.4	9.4	13.3
11 1/4° Bend	0.9	1.8	4.7	4.7	6.7

* TABLE CALCULATED BASED ON NFPA 24, CURRENT EDITION TABLE A 10.8.2(b), WITH 250 PSI WATER PRESSURE AND 1500 PSF SOIL BEARING PRESSURE.

A / X200 CONCRETE THRUST BLOCKS
NOT TO SCALE

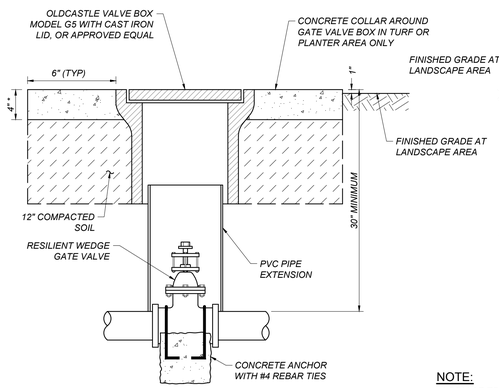

2-1/2" AND LARGER

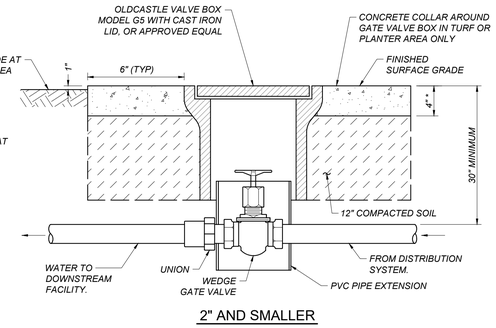

2" AND SMALLER

NOTE:
* COLLAR TO BE 6" THICK IN VEHICULAR TRAFFIC AREAS

B / X200 GATE VALVE AND LID
NOT TO SCALE

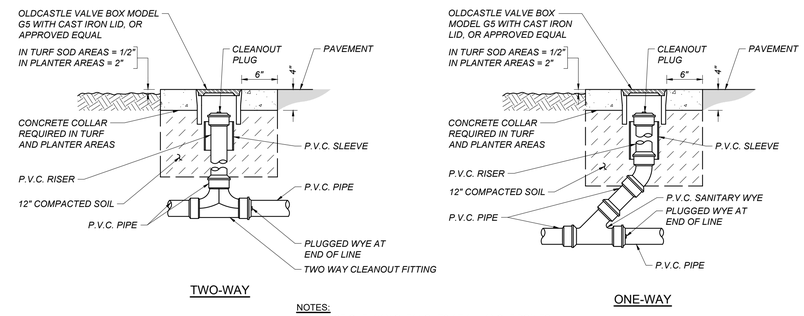

NOTES:
1. USE ONE-WAY CLEANOUTS AT ALL ANGLE POINTS
2. TWO-WAY CLEANOUTS AT ALL OTHER LOCATIONS
3. 6" THICK CONCRETE COLLAR IN VEHICULAR TRAFFIC AREAS

C / X200 SURFACE CLEANOUT
NOT TO SCALE

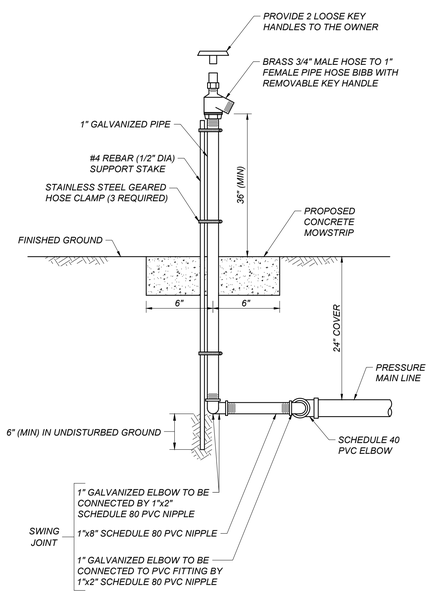

D / X200 HOSE BIBB INSTALLATION
NOT TO SCALE

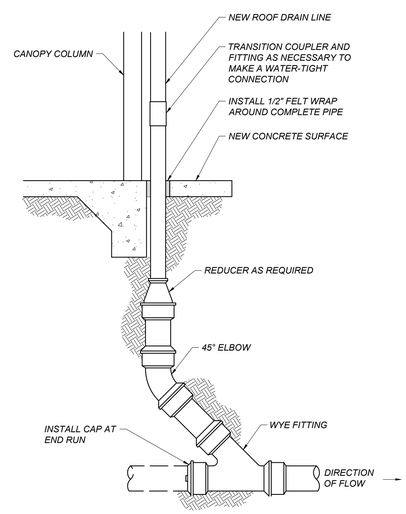

E / X200 SHADE CANOPY DOWN-SPOUT CONNECTION
NOT TO SCALE

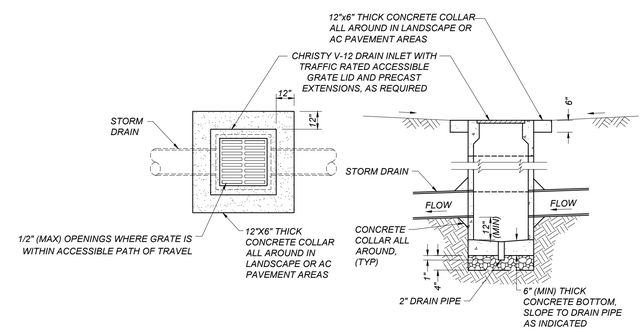

F / X200 V-12 DRAIN INLET WITH CONCRETE COLLAR
NOT TO SCALE

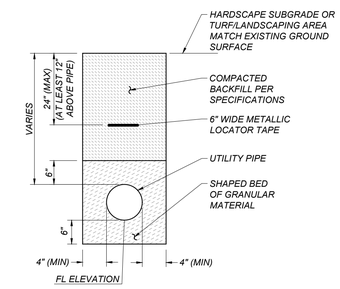

G / X200 TRENCH DETAIL FOR UTILITY LINES
NOT TO SCALE

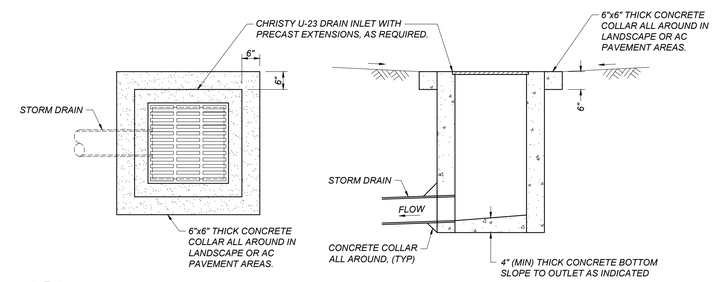

H / X200 U-23 DRAIN INLET WITH CONCRETE COLLAR
NOT TO SCALE

Blair, Church & Flynn
CONSULTING ENGINEERS

REGISTERED PROFESSIONAL ENGINEER
JOHN D. HOFFMAN
No. 61218
CIVIL
STATE OF CALIFORNIA
02/13/2024
Date Signed:

CONSULTANT
Blair, Church & Flynn Consulting Engineers
451 Clovis Avenue, Suite 200
Clovis, California 93612
Tel (559) 326-1400
Fax (559) 326-1500

REF. & REV.

MERCED COLLEGE GREENHOUSE COMPLEX

GREENHOUSE COMPLEX
UTILITY DETAILS

CONST. DOCUMENTS

DR. BY: AH
CH. BY: ZH
DATE: 02/13/2024
SCALE AS NOTED

X200

IDENTIFICATION STAMP
DIV. OF THE STATE ARCHITECT
APP: 02-121754 INC:
REVIEWED FOR
SS ☐ FLS ☐ ACS ☑
DATE: 02/21/2024

FOR DSA USE ONLY

DSA APP# 02-121754

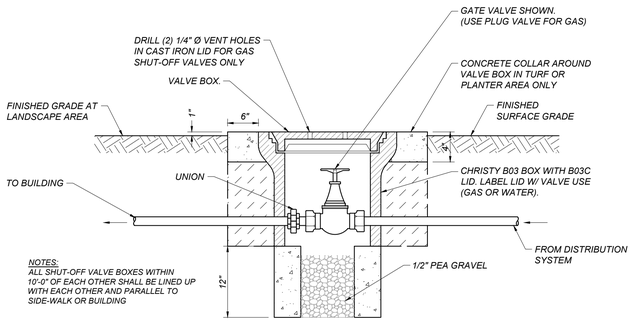

NOTES:
ALL SHUT-OFF VALVE BOXES WITHIN 10'-0" OF EACH OTHER SHALL BE LINED UP WITH EACH OTHER AND PARALLEL TO SIDE-WALK OR BUILDING

A
X201

SHUT-OFF VALVE IN BOX DETAIL

NOT TO SCALE

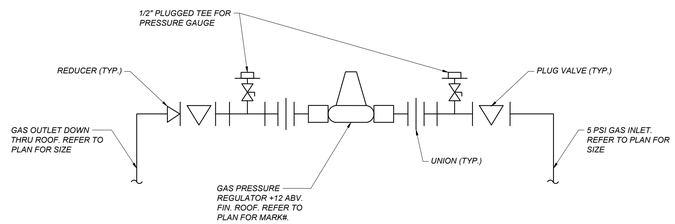

B
X201

GAS PRESSURE REGULATOR VALVE DETAIL

NOT TO SCALE

Blair, Church & Flynn
CONSULTING ENGINEERS

REGISTERED PROFESSIONAL ENGINEER
ROBERT D. ARNOLD
No. 57218
CIVIL
STATE OF CALIFORNIA
02/13/2024
Date Signed:

CONSULTANT
Blair, Church & Flynn
Consulting Engineers
451 Clovis Avenue,
Suite 200
Clovis, California 93612
Tel (559) 326-1400
Fax (559) 325-1500

REF. & REV.

MERCED COLLEGE GREENHOUSE COMPLEX

GREENHOUSE COMPLEX

UTILITY DETAILS

CONST. DOCUMENTS

DR. BY: AH
CH. BY: ZH
DATE: 02/13/2024
SCALE AS NOTED

X201

Drawing: P:\2021\121-00\plans\construction\121-X_ATC-Prep Site Detail.dwg
Plot by: GYlescas Feb 21, 2024 - 11:13am

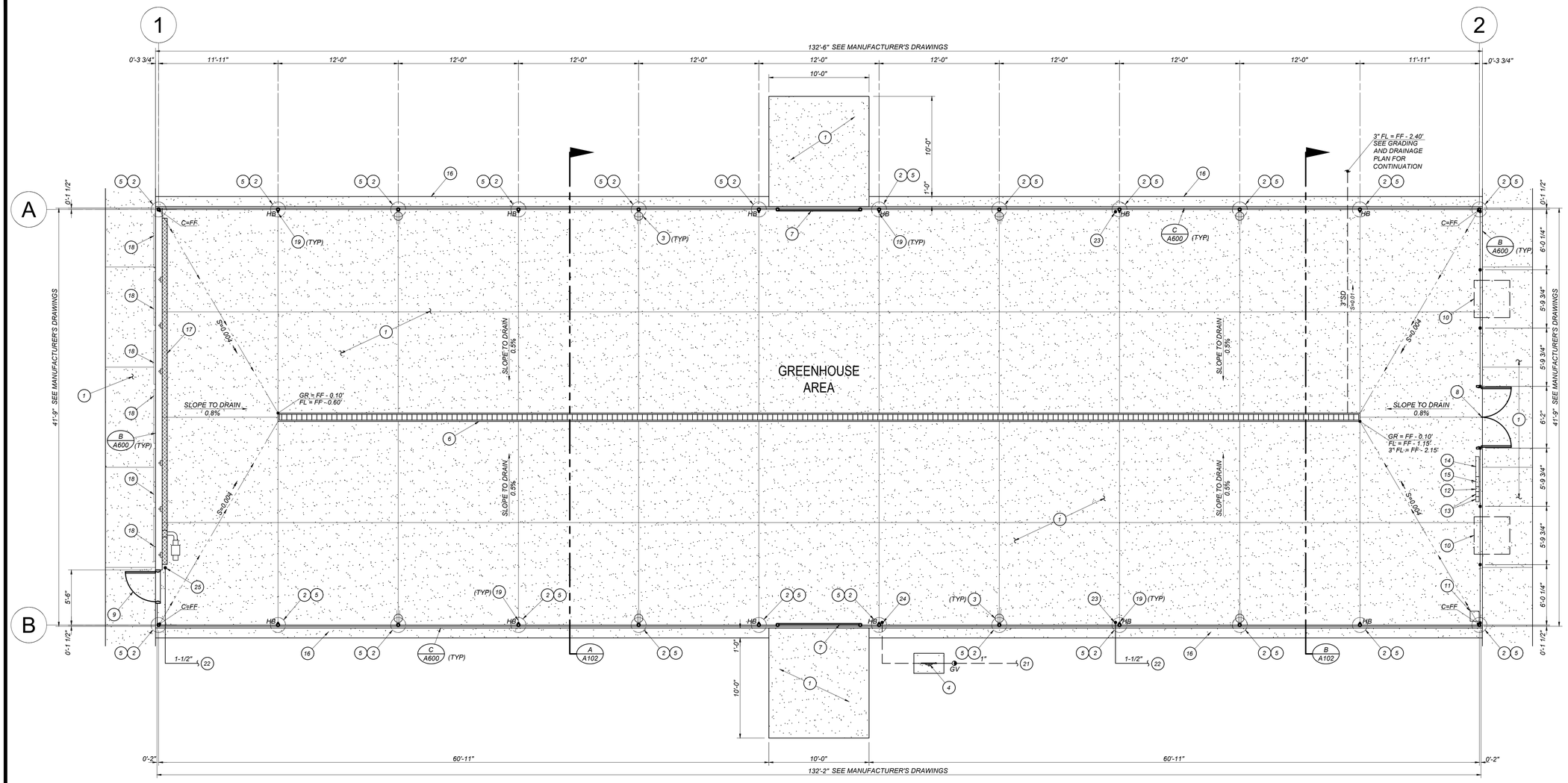

A
A100

PROPOSED MAIN GREENHOUSE FLOOR AND FOUNDATION PLAN

3/16" = 1'-0" NOTE: THIS WORK IS EXEMPT FROM DSA STRUCTURAL SAFETY AND FIRE LIFE SAFETY REVIEW PER DSA IR A-22 SECTION 1.2.1 AND 2.1.2

IDENTIFICATION STAMP
DIV. OF THE STATE ARCHITECT
APP: 02-121754 INC:
REVIEWED FOR
SS ☐ FLS ☐ ACS ☑
DATE: 02/21/2024

FOR DSA USE ONLY

DSA APP# 02-121754

GRADING AND DRAINAGE LEGEND:

C	CONCRETE
FF	FINISHED FLOOR
FL	FLOWLINE
GR	STORM DRAIN GRATE
328.78	NEW FINISHED GRADE
	DIRECTION OF SURFACE DRAINAGE
S=0.0050	PIPE SLOPE AND DIRECTION OF FLOW
	SWALE AND DIRECTION OF FLOW
6"SD	STORM DRAIN PIPELINE; SIZE AS NOTED. TRENCH AND BACKFILL PER DETAIL [G/X200]
S=0.0020	FLOWLINE SLOPE AND DIRECTION OF FLOW

KEYNOTES

1. GREENHOUSE INTERIOR CONCRETE SLAB PER DETAIL [A/X100]. HEAVY BROOM FINISH.
2. CONCRETE FOOTING PER DETAIL [A/A600]
3. ELECTRICAL EQUIPMENT, SEE ELECTRICAL PLANS
4. GAS REGULATOR IN CAGE, SEE DETAIL [A/X100] FOR HOUSEKEEPING PAD
5. STRUCTURAL STEEL COLUMN. SEE MANUFACTURER'S PLANS FOR ADDITIONAL INFORMATION.
6. TRENCH DRAIN GUTTER WITH GRATE PER DETAIL [D/A600]
7. 8' X 8' STANDARD WINANDY SHEET STEEL ROLL UP DOOR, (TYP.2)
8. 6' X 7' X 1-3/4" THICK STANDARD WINANDY HALF GLASS DOUBLE DOOR (WITH STANDARD DOUBLE LEVER "BEST" STYLE CORE LOCK SET)
9. 3' X 7' X 1-3/4" THICK STANDARD WINANDY HALF GLASS SINGLE DOOR (WITH STANDARD DOUBLE LEVER "BEST" STYLE CORE LOCK SET)
10. ACME EXHAUST FAN, (2) DCA42J, 1 HP., W/WS, W/GS, W/SLANT WALL HOUSING, W/INLET & OUTLET GUARD, WITH SHUTTER, 115 V
11. TGU ROOF SHADE SYSTEM DRIVE MOTOR, $\frac{1}{2}$ HP, 2.5 AMPS, W/ 50% FLAME RETARDANT SHADE CLOTH (TYP. 1)
12. MOTORIZED SHADE SYSTEM CONTROL PANEL, (TYP.1)
13. "LOCK" VENT MACHINE CONTROL PANEL, (TYP.2)
14. WADSWORTH ENVIROSTEP GREENHOUSE CONTROLLER W/ STEP SAVER SOFTWARE, WIRED ALARM MANAGER, 115V, 2 AMPS (TYP.1)
15. WADSWORTH ENVIROSTEP CONTACTOR PANEL, 115V, 2 AMPS (TYP.1)
16. MOWSTRIP AT BUILDING PERIMETER, SEE SIDE PLAN
17. ACME CAEG KOOL-CEL PAD SYSTEM (1) 35' LG x 4" THICK PADS X60" TALL, SUBMERSIBLE PUMP MODEL #20S, 1/3 HP, 115V., 2.9 AMPS
18. ACME WAAC6363MT MOTORIZED PAD INLET SHUTTER, 115V, 0.1 AMPS, (TYP. 6)
19. HOSE BIBB MOUNTED TO STEEL SUPPORT PER DETAIL [D/X200]
20. INTERIOR WATER PIPE MOUNTED TO STEEL SUPPORT WITH DOUBLE-SIDED SADDLE STRAP
21. SEE UTILITY PLAN FOR CONTINUATION OF 1" S# G LINE
22. SEE UTILITY PLAN FOR CONTINUATION OF 1-1/2" WATER LINE
23. 1-1/2" SCH40 PVC WATER RISER ATTACHED TO STEEL COLUMN WITH DOUBLE SIDED SADDLE STRAPS AT 2' SPACING ANCHORED TO COLUMN. RUN 1" WATER LATERALS IN BOTH DIRECTIONS TO SERVE THE HOSE BIBBS SHOWN ON THIS FLOOR PLAN. SET LATERALS AT 42" AFF TO CLEAR PLANTING TABLE TOPS
24. 1" GAS RISER ATTACHED TO STEEL COLUMN WITH UNISTRUT SUPPORTS ANCHORED TO COLUMN AT 3' SPACING. SEE REFLECTED CEILING PLAN FOR CONTINUATION
25. 1-1/2" SCH40 PVC WATER RISER ATTACHED TO STEEL COLUMN WITH DOUBLE SIDED SADDLE STRAPS AT 2' SPACING ANCHORED TO COLUMN. RUN RISER UP TO SERVE THE KOOL-CELL EVAPORATIVE COOLING SYSTEM AND THEN UP INTO ROOF FRAMING AND LATERALLY TO SERVE THE SPRAY BOOM HOSE CONNECTION ON THE NORTH END WALL. COORDINATE WITH SPRAY BOOM INSTALLATION

GREENHOUSE NOTES:

1. GREENHOUSE STRUCTURE AND EQUIPMENT SHALL BE INSTALLED PER THE MANUFACTURER'S INSTALLATION INSTRUCTIONS AND GUIDELINES. IF THERE IS A DISCREPANCY BETWEEN THESE PLANS AND THE MANUFACTURER'S INSTRUCTIONS, THE MANUFACTURER'S INSTRUCTIONS SHALL GOVERN. CONTRACTOR SHALL BRING ALL DISCREPANCIES TO THE ATTENTION OF THE ENGINEER OF RECORD PRIOR TO STARTING CONSTRUCTION.

Blair, Church & Flynn
CONSULTING ENGINEERS

REGISTERED PROFESSIONAL ENGINEER
ZACHARY D. HAYES
No. 87218
CIVIL
STATE OF CALIFORNIA
02/13/2024
Date Signed:

CONSULTANT
Blair, Church & Flynn
Consulting Engineers
451 Clovis Avenue,
Suite 200
Clovis, California 93612
Tel (559) 326-1400
Fax (559) 326-1500

REF. & REV.

MERCED COLLEGE GREENHOUSE COMPLEX

GREENHOUSE COMPLEX
MAIN GREENHOUSE
FLOOR & FOUNDATION PLANS

CONST. DOCUMENTS

DR. BY: AH
CH. BY: ZH
DATE: 02/13/2024
SCALE AS NOTED

A100

Drawing: P:\2021\21-03\Merced\construction\drawings\121754_CD\R01\Bldg 1.dwg\A1.1 - PDF.dwg
Plot by: GYlasiosia Feb 21, 2024 - 11:13am

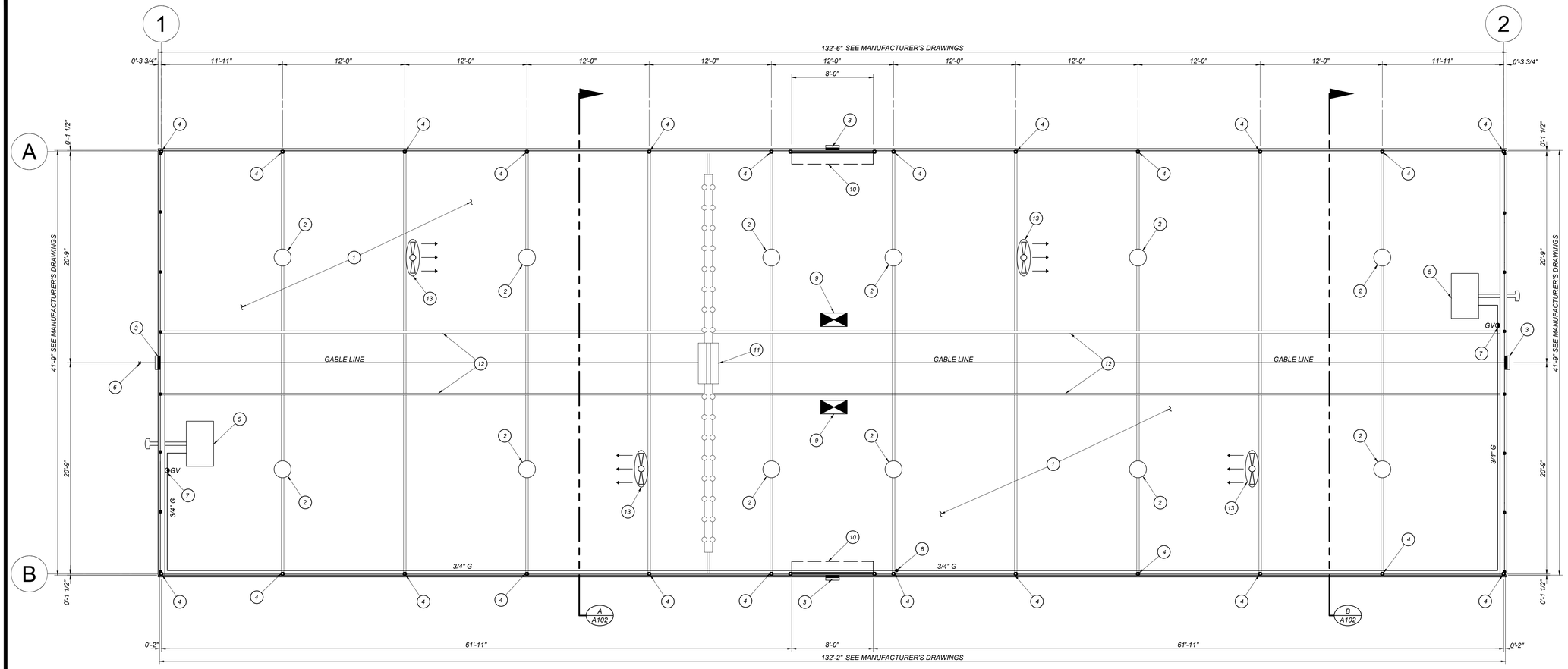

A
A101

PROPOSED MAIN GREENHOUSE REFLECTED CEILING PLAN

3/16" = 1'-0" NOTE: THIS WORK IS EXEMPT FROM DSA STRUCTURAL SAFETY AND FIRE LIFE SAFETY REVIEW PER DSA IR A-22 SECTION 1.2.1 AND 2.1.2

IDENTIFICATION STAMP
DIV. OF THE STATE ARCHITECT
APP: 02-121754 INC:
REVIEWED FOR
SS ☐ FLS ☐ ACS ☑
DATE: 02/21/2024

FOR DSA USE ONLY

DSA APP# 02-121754

KEYNOTES

1. ROOF PURLIN WITH #12 FASTENERS
2. HIGH-BAY LIGHT FIXTURE, SEE ELECTRICAL PLANS
3. WALLPACK LIGHT FIXTURE, SEE ELECTRICAL PLANS
4. STRUCTURAL STEEL COLUMN. SEE MANUFACTURER'S PLANS FOR ADDITIONAL INFORMATION.
5. MODINE PTP300S GAS FIRED HEATER
6. WADSWORTH ENVIROSTEP WEATHER STATION WITH MAST, MOUNTED TO EXTERIOR GABLE PEAK
7. GAS SHUT-OFF BALL VALVE
8. 1" GAS RISER ATTACHED TO STEEL COLUMN WITH UNISTRUT SUPPORTS ANCHORED TO COLUMN AT 3' SPACING. RUN 3/4" GAS LATERALS AT 9'-6" AFF IN BOTH DIRECTIONS TO THE GAS-FIRED HEATERS AT BOTH ENDS OF THE BUILDING, UNISTRUT SUPPORTS AT MINIMUM 3' SPACING ANCHORED TO GREENHOUSE FRAMING
9. EWA10 90NM LOCK DRIVE ELECTRIC MOTORIZED ROOF VENT MACH. FOR RACK & PINION OPERATION.
10. 8' X 8' STANDARD WINANDY STEEL ROLL -UP DOOR
11. CHERRY CREEK WATERING BOOM WITH BALDOR DC AND CHAIN DRIVE-1/4 HP, 2.5 AMPS (2 ROWS) SINGLE WATER BAR SETUP WITH TEEJET SPRAYS (0.8GPM) EVERY 18", WHIP HOSE WATERING ASSEMBLY. COMPASS CAPTURE CONTROLLER W/ AREA CAPTURE PROGRAM.
12. 2" X 2" SQ. STEEL WATERING BOOM TRACK
13. SCHAEFER VK12, 12" DIA. HAF FAN, 115V, 1/10HP, 1.3A (TYP. 4)

GREENHOUSE NOTES:

1. GREENHOUSE STRUCTURE AND EQUIPMENT SHALL BE INSTALLED PER THE MANUFACTURER'S INSTALLATION INSTRUCTIONS AND GUIDELINES. IF THERE IS A DISCREPANCY BETWEEN THESE PLANS AND THE MANUFACTURER'S INSTRUCTIONS, THE MANUFACTURER'S INSTRUCTIONS SHALL GOVERN. CONTRACTOR SHALL BRING ALL DISCREPANCIES TO THE ATTENTION OF THE ENGINEER OF RECORD PRIOR TO STARTING CONSTRUCTION.

Blair, Church & Flynn
CONSULTING ENGINEERS

REGISTERED PROFESSIONAL ENGINEER
JERRY D. HUNT
No. 57218
CIVIL
STATE OF CALIFORNIA
02/13/2024
Date Signed:

CONSULTANT
Blair, Church & Flynn
Consulting Engineers
4551 Clovis Avenue,
Suite 200
Clovis, California 93612
Tel (559) 326-1400
Fax (559) 326-1500

REF. & REV.

MERCED COLLEGE GREENHOUSE COMPLEX

GREENHOUSE COMPLEX
MAIN GREENHOUSE
REFLECTED CEILING PLAN

CONST. DOCUMENTS

DR. BY: AH
CH. BY: ZH
DATE: 02/13/2024
SCALE AS NOTED

A101

Drawing: R:\2022\2121-02\Greenhouse\Greenhouse\A101\A101_GHREC.dwg Layout: REFLAB
Plot by: GVillacidos Feb 21, 2024 - 11:13am

IDENTIFICATION STAMP
DIV. OF THE STATE ARCHITECT
APP: 02-121754 INC:
REVIEWED FOR
SS ☐ FLS ☐ ACS ☑
DATE: 02/21/2024

FOR DSA USE ONLY

DSA APP# 02-121754

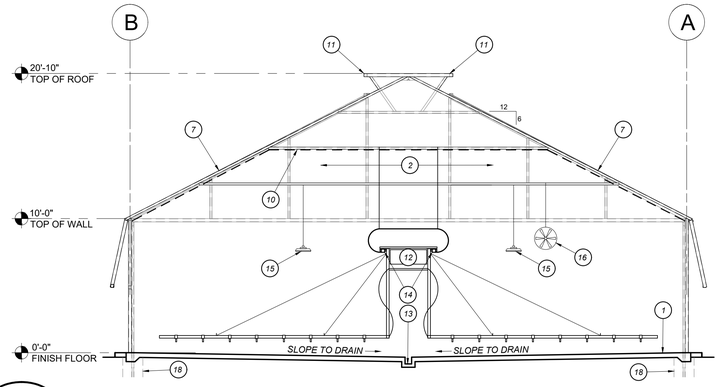

A
A102

BUILDING SECTION

3/16" = 1'-0" NOTE: THIS WORK IS EXEMPT FROM DSA STRUCTURAL SAFETY AND FIRE LIFE SAFETY REVIEW PER DSA IR A-22 SECTION 1.2.1 AND 2.1.2

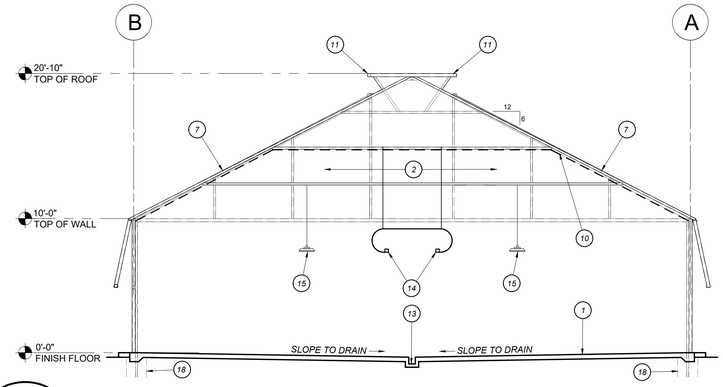

B
A102

BUILDING SECTION

3/16" = 1'-0" NOTE: THIS WORK IS EXEMPT FROM DSA STRUCTURAL SAFETY AND FIRE LIFE SAFETY REVIEW PER DSA IR A-22 SECTION 1.2.1 AND 2.1.2

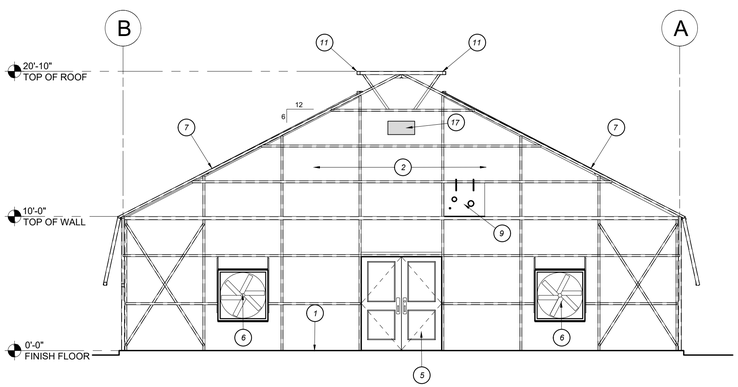

C
A102

SOUTH EXTERIOR ELEVATION

3/16" = 1'-0" NOTE: THIS WORK IS EXEMPT FROM DSA STRUCTURAL SAFETY AND FIRE LIFE SAFETY REVIEW PER DSA IR A-22 SECTION 1.2.1 AND 2.1.2

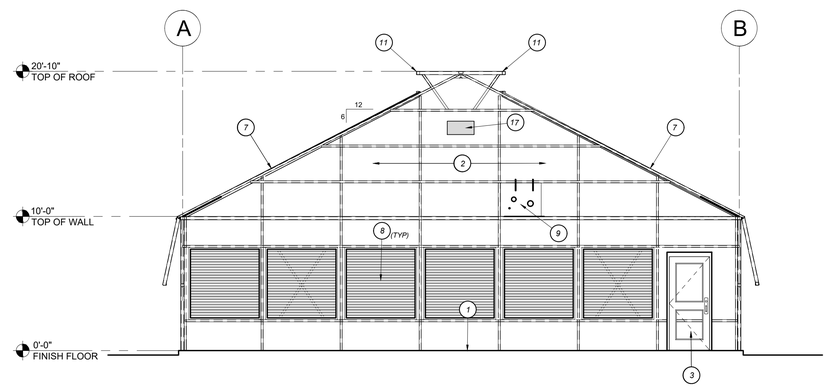

D
A102

NORTH EXTERIOR ELEVATION

3/16" = 1'-0" NOTE: THIS WORK IS EXEMPT FROM DSA STRUCTURAL SAFETY AND FIRE LIFE SAFETY REVIEW PER DSA IR A-22 SECTION 1.2.1 AND 2.1.2

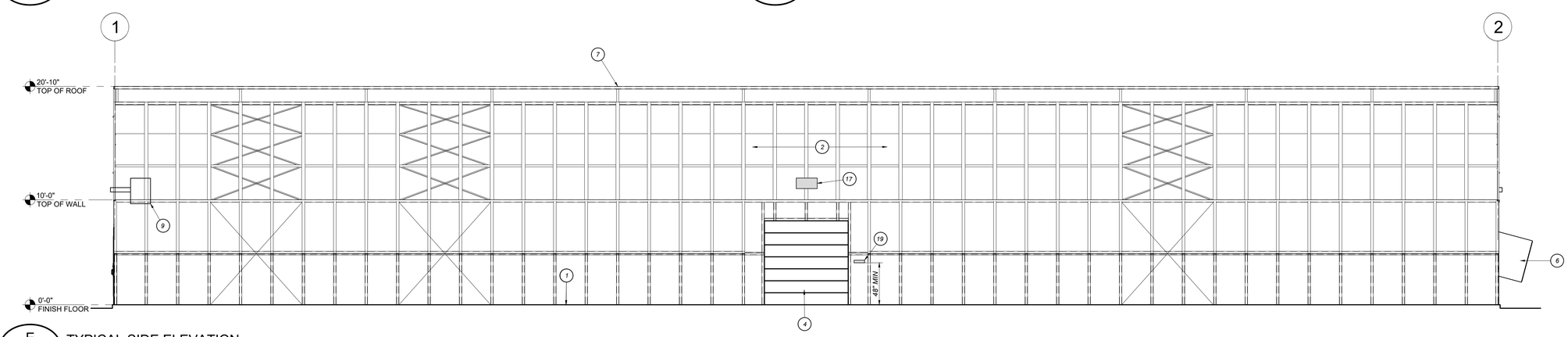

E
A102

TYPICAL SIDE ELEVATION

3/16" = 1'-0" NOTE: THIS WORK IS EXEMPT FROM DSA STRUCTURAL SAFETY AND FIRE LIFE SAFETY REVIEW PER DSA IR A-22 SECTION 1.2.1 AND 2.1.2

KEYNOTES

1. GREENHOUSE INTERIOR CONCRETE SLAB PER DETAIL [A/X100], HEAVY BROOM FINISH
2. STRUCTURAL STEEL FRAMING. SEE MANUFACTURER'S PLANS FOR ADDITIONAL INFORMATION.
3. 3' X 7' X 1-3/4" THICK STANDARD WINANDY HALF GLASS SINGLE DOOR (WITH STANDARD DOUBLE LEVER "BEST" STYLE CORE LOCK SET)
4. 8' X 8' STANDARD WINANDY SHEET STEEL ROLL UP DOOR, (TYP.2)
5. 6' X 7' X 1-3/4" THICK STANDARD WINANDY HALF GLASS DOUBLE DOOR (WITH STANDARD DOUBLE LEVER "BEST" STYLE CORE LOCK SET)
6. ACME EXHAUST FAN, (2) DCA42J, 1 HP , W/WS, W/GS, W/SLANT WALL HOUSING, W/INLET & OUTLET GUARD, WITH SHUTTER, 115 V
7. ROOF PURLIN WITH #12 FASTENERS
8. ACME WAAC6363MT MOTORIZED PAD INLET SHUTTER, 115V, 0.1 AMPS, (TYP. 6)
9. MODINE PTP300S GAS FIRED HEATER
10. TGU MOTORIZED SHADE SYSTEM WITH ALUMINET 50% ICFR SHADE CLOTH SHOWN DASHED
11. 36" ELECTRIC MOTORIZED RACK & PINION RIDGE VENTS, SEE MANUFACTURER'S PLANS
12. CHERRY CREEK WATERING BOOM WITH BALDOR DC AND CHAIN DRIVE-1/4 HP, 2.5 AMPS (2 ROWS) SINGLE WATER BAR SETUP WITH TEEJET SPRAYS (0.8GPM) EVERY 18", WHIP HOSE WATERING ASSEMBLY COMPASS CAPTURE CONTROLLER W/ AREA CAPTURE PROGRAM.
13. TRENCH DRAIN GUTTER GRATE PER DETAIL [D/A600]
14. 2" X 2" SQ. STEEL WATERING BOOM TRACK
15. HIGH-BAY LIGHT FIXTURE, SEE ELECTRICAL PLANS
16. SCHAEFER VK12, 12" DIA. HAF FAN, 115V, 1/10HP, 1.3A (TYP. 4)
17. WALLPACK LIGHT FIXTURE, SEE ELECTRICAL PLANS
18. COLUMN FOOTINGS WHERE THEY OCCUR
19. MOUNT SIGN TO WALL ADJACENT TO ROLL UP DOOR THAT READS "MAINTENANCE ACCESS ONLY" SIGN SHALL BE WHITE BACKGROUND WITH 1" HIGH LETTERING THAT COMPLIES WITH SECTION 11B-703 OF THE CBC

Blair, Church & Flynn
CONSULTING ENGINEERS

REGISTERED PROFESSIONAL ENGINEER
ZACHARY D. HOLT
No. 87218
CIVIL
STATE OF CALIFORNIA
02/13/2024
Date Signed

CONSULTANT
Blair, Church & Flynn
Consulting Engineers
451 Clovis Avenue,
Suite 200
Clovis, California 93612
Tel (559) 326-1400
Fax (559) 326-1500

REF. & REV.

MERCED COLLEGE GREENHOUSE COMPLEX

GREENHOUSE COMPLEX
MAIN GREENHOUSE
ELEVATIONS & SECTION

CONST. DOCUMENTS

DR. BY: AH
CH. BY: ZH
DATE: 02/13/2024
SCALE AS NOTED

A102

Drawing: P:\2022\22141\drawings\construction\sheets\22141_C_GREEN Aug Layout1.dwg
Plot by: GVillasoto Feb 21, 2024 - 11:13am

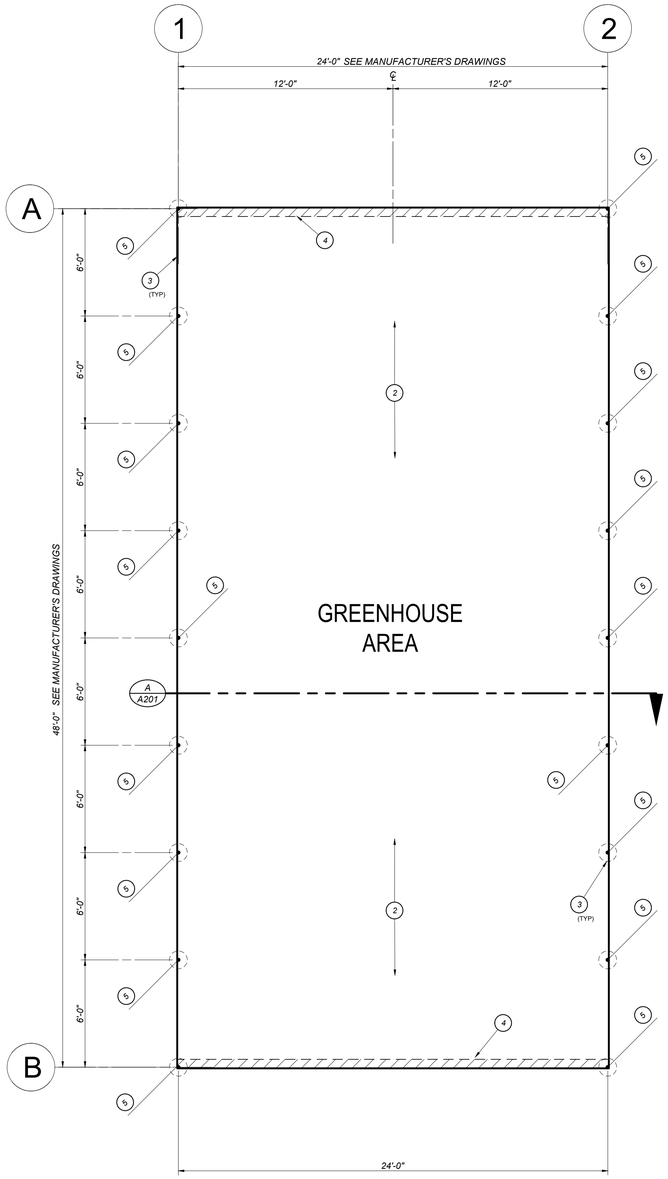

A / A200 PROPOSED SMALL GREENHOUSE 1 & 2 FOUNDATION PLAN

1/4" = 1'-0" NOTE: THIS WORK IS EXEMPT FROM DSA STRUCTURAL SAFETY AND FIRE LIFE SAFETY REVIEW PER DSA IR A-22 SECTION 1.2.1 AND 2.1.2

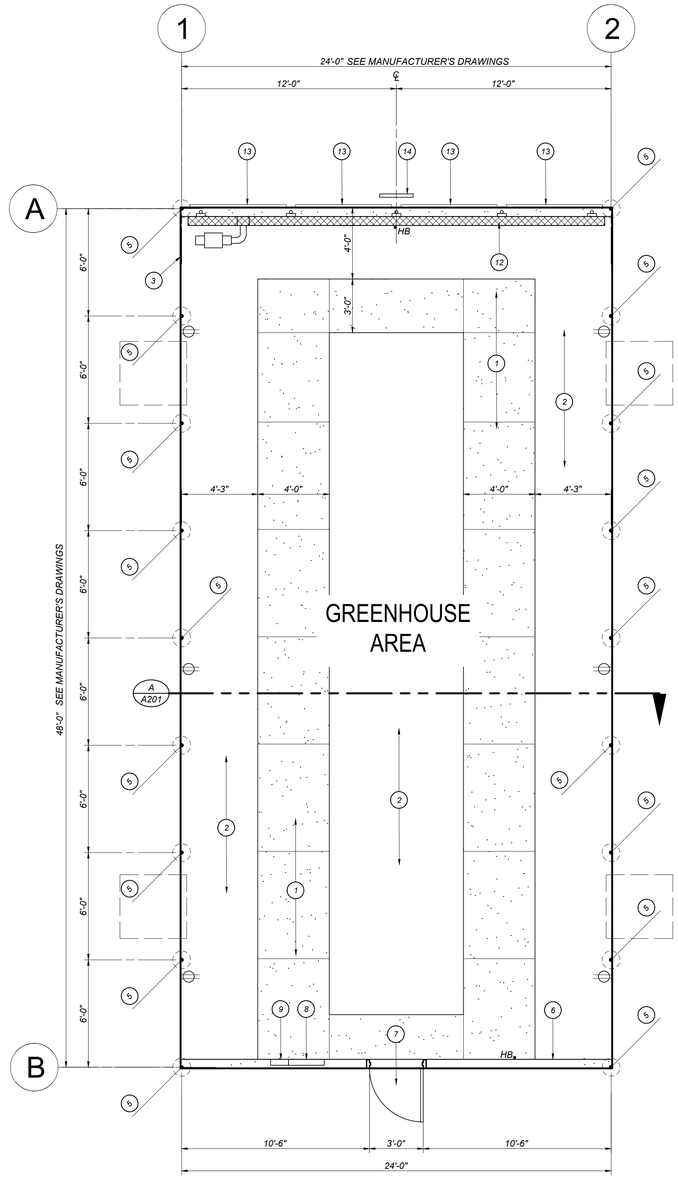

B / A200 PROPOSED SMALL GREENHOUSE 1 & 2 FLOOR PLAN

1/4" = 1'-0" NOTE: THIS WORK IS EXEMPT FROM DSA STRUCTURAL SAFETY AND FIRE LIFE SAFETY REVIEW PER DSA IR A-22 SECTION 1.2.1 AND 2.1.2

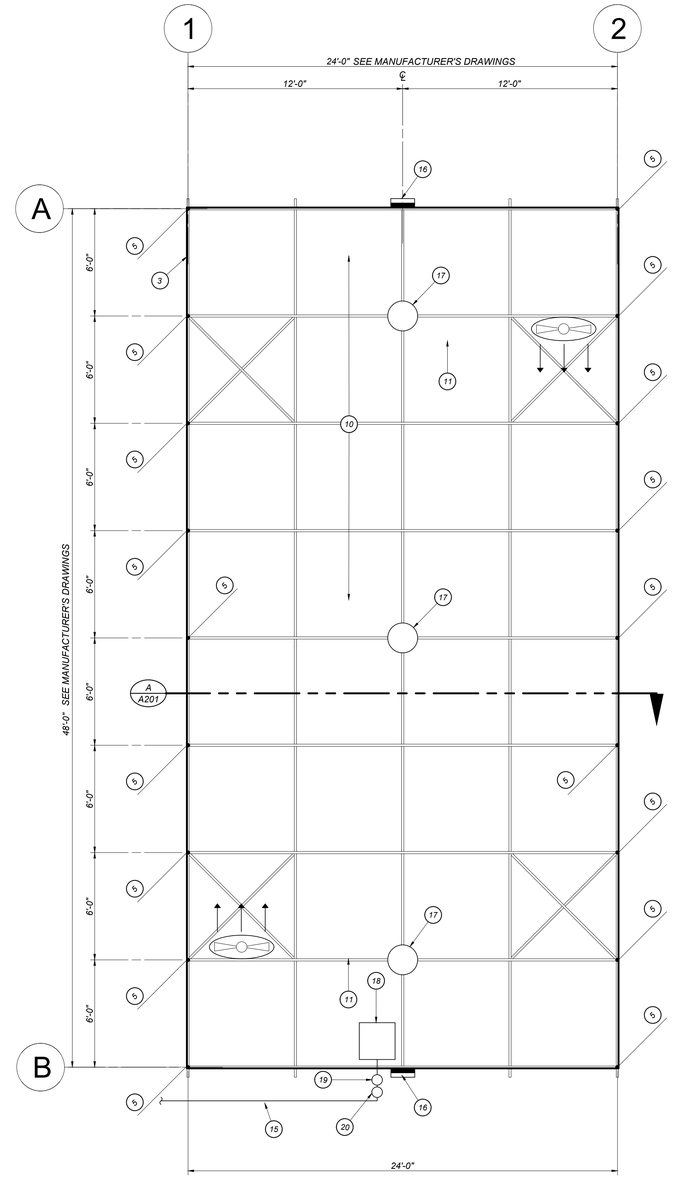

C / A200 PROPOSED SMALL GREENHOUSE 1 & 2 REFLECTED CEILING PLAN

1/4" = 1'-0" NOTE: THIS WORK IS EXEMPT FROM DSA STRUCTURAL SAFETY AND FIRE LIFE SAFETY REVIEW PER DSA IR A-22 SECTION 1.2.1 AND 2.1.2

IDENTIFICATION STAMP
DIV. OF THE STATE ARCHITECT
APP: 02-121754 INC:
REVIEWED FOR
SS ☐ FLS ☐ ACS ☑
DATE: 02/21/2024

FOR DSA USE ONLY

DSA APP# 02-121754

KEYNOTES

1. GREENHOUSE INTERIOR CONCRETE SLAB PER DETAIL [A/X100], HEAVY BROOM FINISH.
2. GRAVEL INFILL WITH WEED BARRIER PER DETAIL [B/X100]
3. 12 INCH DIAMETER X 30 INCH DEEP 2500 PSI CONCRETE FOOTING
4. 6 INCH WIDE CONCRETE FOOTING X 8 INCH DEEP WITH REBAR #4 HORIZONTAL
5. STRUCTURAL STEEL COLUMN. SEE MANUFACTURER'S PLANS FOR ADDITIONAL INFORMATION.
6. EXTERIOR WALL
7. 3' X 6'-8" PLYCO SERIES 20 INSULATED DOOR (WITH FALCON LEVER/ LOCKSET INCLUDES ADA THRESHOLDS AND COMMANDER PACK RHOS
8. ELECTRICAL PANEL
9. WADSWORTH ENVIROSTEP CONTACTOR PANEL, 115V, 2 AMPS (TYP.1)
10. ROOF PURLIN WITH #12 FASTENERS
11. SCHAEFER VK12, 12" DIA. HAF FAN, 115V, 1/10HP, 1.3A (TYP. 4)
12. QUIETAIRE EVAPORATIVE COOLING SYSTEM (1) 15' LONG x 4" THICK PADS x 36" TALL, SUBMERSIBLE PUMP MODEL ____
13. ACME WAAC6363MT MOTORIZED PAD INLET SHUTTER, 115V, 0.1 AMPS, (TYP. 4)
14. WADSWORTH ENVIROSTEP WEATHER STATION WITH MAST, (MOUNTING, PLACEMENT & CONTROL WIRING BY OTHER)
15. 3/4 INCH FUSE SDR11
16. 100 W LED WALLPACK
17. 150 W HIGH-BAY LED
18. MODINE 'HOT DAWG' GAS-FIRED HEATER
19. REGULATOR
20. SHUT-OFF VALVE

Blair, Church & Flynn
CONSULTING ENGINEERS

REGISTERED PROFESSIONAL ENGINEER
ZACHARY D. HUNT
No. 87218
CIVIL
STATE OF CALIFORNIA
02/13/2024
Date Signed

CONSULTANT
Blair, Church & Flynn
Consulting Engineers
451 Clovis Avenue,
Suite 200
Clovis, California 93612
Tel (559) 326-1400
Fax (559) 326-1500

REF. & REV.

MERCED COLLEGE GREENHOUSE COMPLEX

GREENHOUSE COMPLEX
SMALL GREENHOUSE
FOUNDATION & FLOOR & CEILING PLANS

CONST. DOCUMENTS

DR. BY: AH
CH. BY: ZH
DATE: 02/13/2024
SCALE AS NOTED

A200

Drawing: P:\2022\121754\proj\construction\graphics\dwg\121754_CD100.dwg, Layout1, 1/50F.dwt
Plot by: GVillalobos Feb 21, 2024 - 11:14am

IDENTIFICATION STAMP
DIV. OF THE STATE ARCHITECT
APP: 02-121754 INC:
REVIEWED FOR
SS ☐ FLS ☐ ACS ☑
DATE: 02/21/2024

FOR DSA USE ONLY

DSA APP# 02-121754

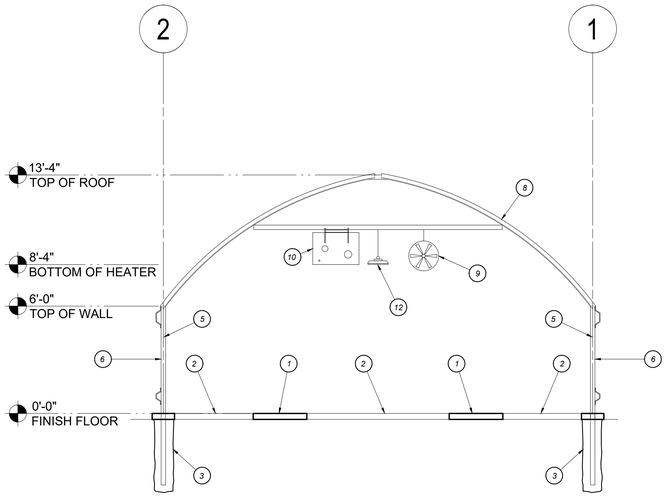

A
A201
BUILDING SECTION
1/4" = 1'-0" NOTE: THIS WORK IS EXEMPT FROM DSA STRUCTURAL SAFETY AND FIRE LIFE SAFETY REVIEW PER DSA IR A-22 SECTION 1.2.1 AND 2.1.2

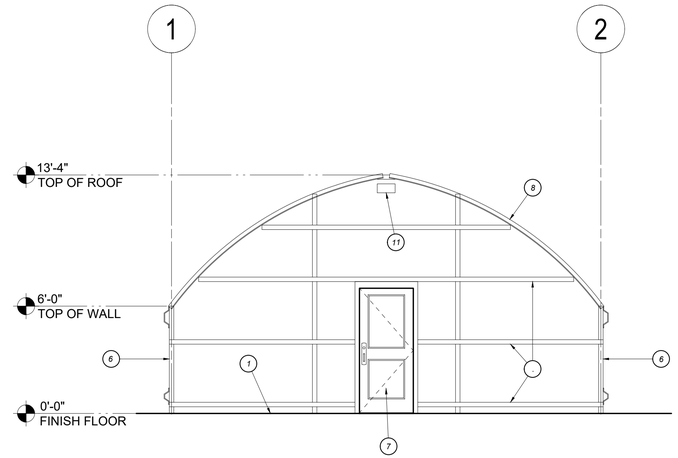

B
A201
SOUTH EXTERIOR ELEVATION
1/4" = 1'-0" NOTE: THIS WORK IS EXEMPT FROM DSA STRUCTURAL SAFETY AND FIRE LIFE SAFETY REVIEW PER DSA IR A-22 SECTION 1.2.1 AND 2.1.2

KEYNOTES

1. GREENHOUSE INTERIOR CONCRETE SLAB PER DETAIL [A/X100], HEAVY BROOM FINISH.
2. 6 INCH THICK COMPACTED 3/4 INCH MINUS GRAVEL
3. 12 INCH DIAMETER X 30 INCH DEEP 2500 PSI CONCRETE FOOTING
4. 6 INCH WIDE CONCRETE FOOTING X 8 INCH DEEP WITH REBAR #4 HORIZONTAL
5. STRUCTURAL STEEL COLUMN. SEE MANUFACTURER'S PLANS FOR ADDITIONAL INFORMATION.
6. EXTERIOR WALL
7. 3' X 6'-8" PLYCO SERIES 20 INSULATED DOOR (WITH FALCON LEVER/ LOCKSET INCLUDES ADA THRESHOLDS AND COMMANDER PACK RHOS
8. ROOF PURLIN WITH #12 FASTENERS
9. SCHAEFER VK12, 12" DIA. HAF FAN, 115V, 1/10HP, 1.3A (TYP. 4)
10. MODINE 'HOT DAWG' GAS-FIRED HEATER
11. 100 W LED WALLPACK
12. 150 W HIGH-BAY LED
13. ACME WAAC6363MT MOTORIZED PAD INLET SHUTTER, 115V, 0.1 AMPS, (TYP. 4)

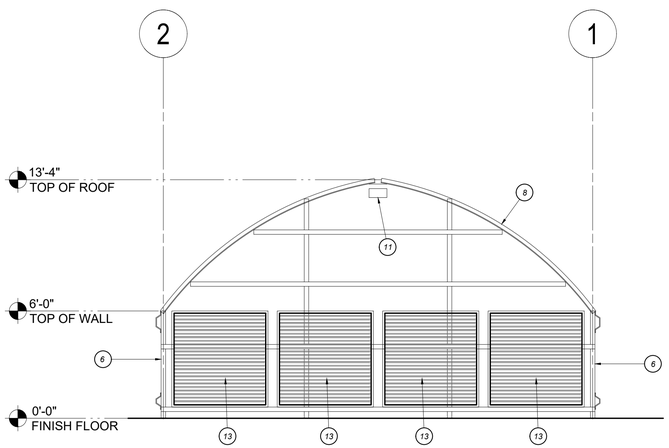

C
A201
NORTH EXTERIOR ELEVATION
1/4" = 1'-0" NOTE: THIS WORK IS EXEMPT FROM DSA STRUCTURAL SAFETY AND FIRE LIFE SAFETY REVIEW PER DSA IR A-22 SECTION 1.2.1 AND 2.1.2

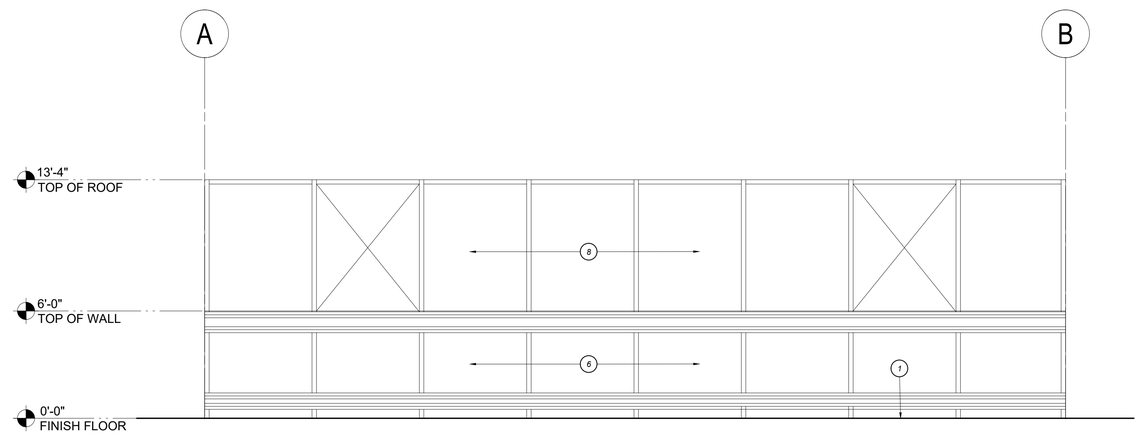

D
A201
EAST/ WEST EXTERIOR ELEVATION
1/4" = 1'-0" NOTE: THIS WORK IS EXEMPT FROM DSA STRUCTURAL SAFETY AND FIRE LIFE SAFETY REVIEW PER DSA IR A-22 SECTION 1.2.1 AND 2.1.2

Blair, Church & Flynn
CONSULTING ENGINEERS

REGISTERED PROFESSIONAL ENGINEER
ZACHARY D. HOLLAND
No. 87218
CIVIL
STATE OF CALIFORNIA
02/13/2024
Date Signed

CONSULTANT
Blair, Church & Flynn
Consulting Engineers
451 Clovis Avenue,
Suite 200
Clovis, California 93612
Tel (559) 326-1400
Fax (559) 326-1500

REF. & REV.

MERCED COLLEGE GREENHOUSE COMPLEX

GREENHOUSE COMPLEX
SMALL GREENHOUSE
ELEVATIONS & SECTIONS

CONST. DOCUMENTS

DR. BY: AH
CH. BY: ZH
DATE: 02/13/2024
SCALE AS NOTED

A201

Drawing: P:\2022\121754\Drawings\construction\greenhouse\121754_CD\A201.dwg Layout1 - PDF.dwg
Plot by: GVilleabos Feb 21, 2024 - 11:14am

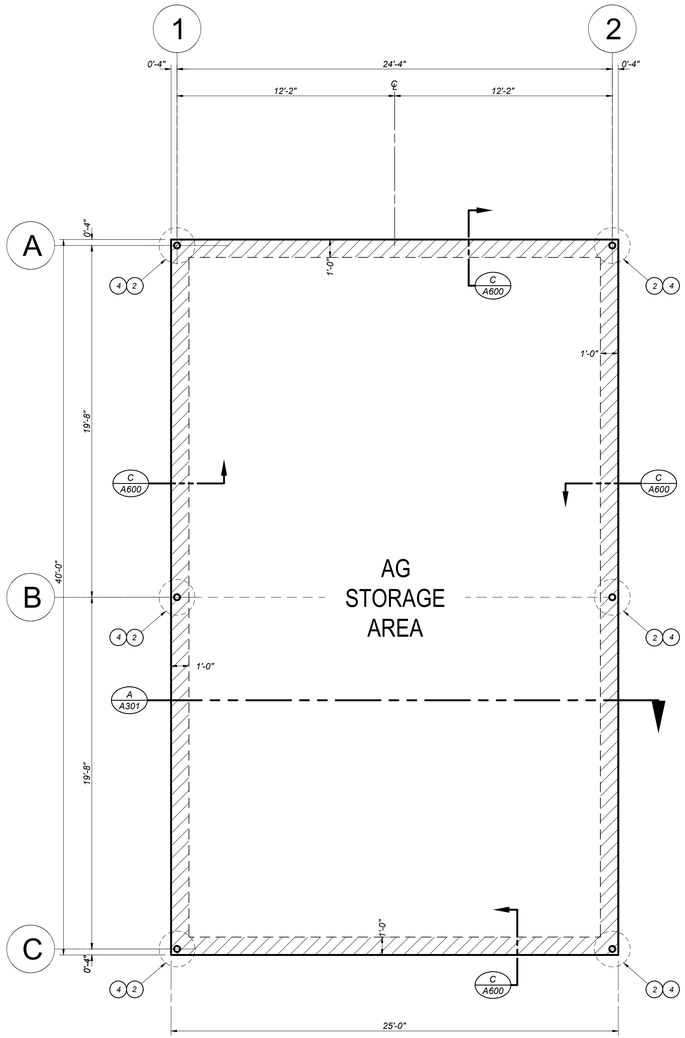

A
A300
PROPOSED AG STORAGE FOUNDATION PLAN

1/4" = 1'-0" NOTE: THIS WORK IS EXEMPT FROM DSA STRUCTURAL SAFETY AND FIRE LIFE SAFETY REVIEW PER DSA IR A-22 SECTION 1.2.1 AND 2.1.2

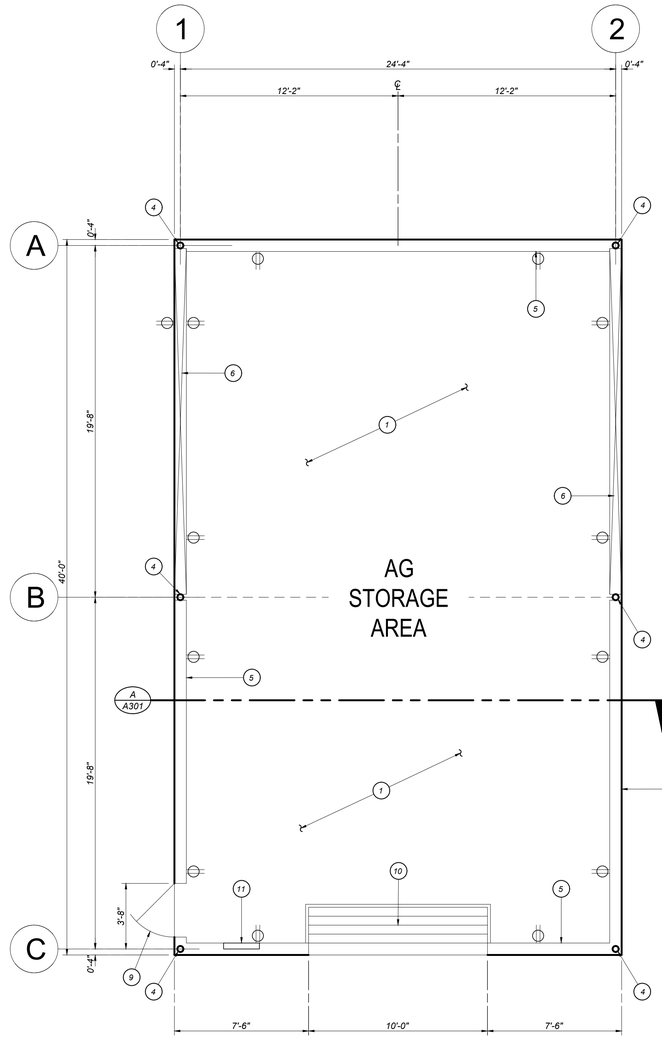

B
A300
PROPOSED AG STORAGE FLOOR PLAN

1/4" = 1'-0" NOTE: THIS WORK IS EXEMPT FROM DSA STRUCTURAL SAFETY AND FIRE LIFE SAFETY REVIEW PER DSA IR A-22 SECTION 1.2.1 AND 2.1.2

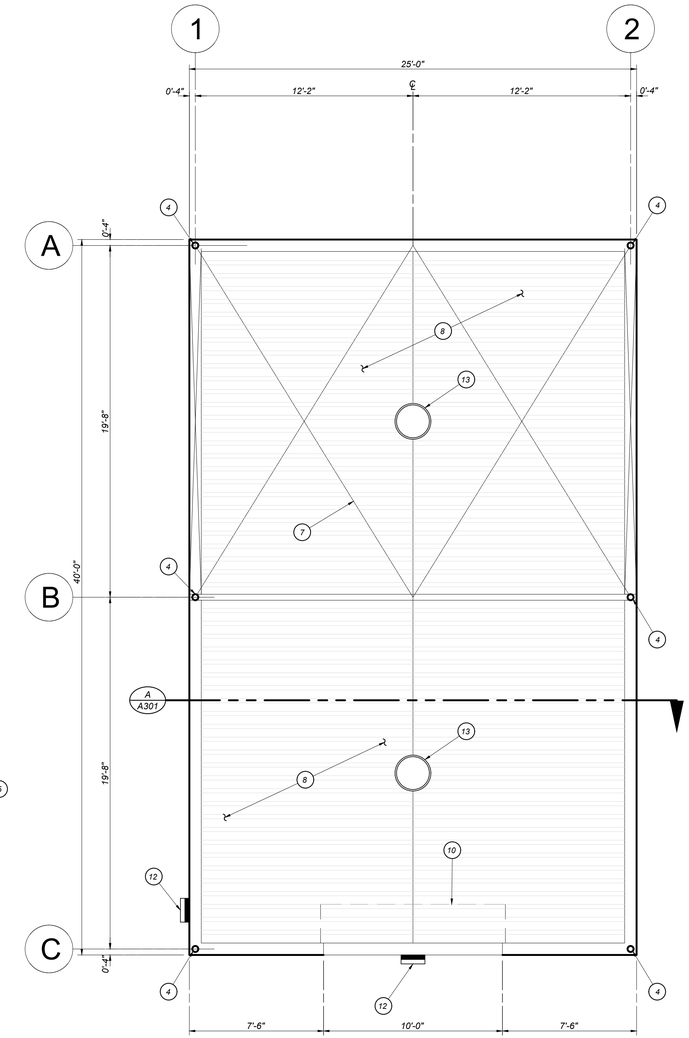

C
A300
PROPOSED AG STORAGE REFLECTED CEILING PLAN

1/4" = 1'-0" NOTE: THIS WORK IS EXEMPT FROM DSA STRUCTURAL SAFETY AND FIRE LIFE SAFETY REVIEW PER DSA IR A-22 SECTION 1.2.1 AND 2.1.2

IDENTIFICATION STAMP
DIV. OF THE STATE ARCHITECT
APP: 02-121754 INC:
REVIEWED FOR
SS ☐ FLS ☐ ACS ☑
DATE: 02/21/2024

FOR DSA USE ONLY

DSA APP# 02-121754

KEYNOTES

1. *INTERIOR CONCRETE SLAB PER DETAIL [A/X100], HEAVY BROOM FINISH.*
2. *24 INCH DIAMETER X 48 INCH DEEP CONCRETE COLUMN FOOTING*
3. *8 INCH WIDE CONCRETE FOOTING X 8 INCH DEEP WITH REBAR #4 HORIZONTAL*
4. *STRUCTURAL STEEL COLUMN. SEE MANUFACTURER'S PLANS FOR ADDITIONAL INFORMATION.*
5. *EXTERIOR WALL*
6. *5/8 INCH DIAMETER TENSION CABLE CROSS-BRACING AT SIDEWALL, SEE MANUFACTURER'S PLANS.*
7. *5/8 INCH DIAMETER TENSION CABLE CROSS-BRACING AT ROOF, SEE MANUFACTURER'S PLANS.*
8. *METAL ROOF. BORGA SUPER PANEL. 26 GAUGE, COLOR ZINCALUME AZ55 PLUS.*
9. *3' X 7' METAL DOOR*
10. *10' X 10' METAL DOOR ROLL-UP DOOR.*
11. *ELECTRICAL PANEL, SEE ELECTRICAL PLANS*
12. *WALLPACK LIGHT FIXTURE, SEE ELECTRICAL PLANS*
13. *HIGH-BAY LIGHT FIXTURE, SEE ELECTRICAL PLANS*

Blair, Church & Flynn
CONSULTING ENGINEERS

REGISTERED PROFESSIONAL ENGINEER
ZACHARY D. HUNT
No. 87218
CIVIL
STATE OF CALIFORNIA
02/13/2024
Date Signed

CONSULTANT
Blair, Church & Flynn
Consulting Engineers
451 Clovis Avenue,
Suite 200
Clovis, California 93612
Tel (559) 326-1400
Fax (559) 326-1500

REF. & REV.

MERCED COLLEGE GREENHOUSE COMPLEX

GREENHOUSE COMPLEX
AG STORAGE
FOUNDATION & FLOOR & CEILING PLANS

CONST. DOCUMENTS

DR. BY: AH
CH. BY: ZH
DATE: 02/13/2024
SCALE AS NOTED

A300

Drawing: P:\2022\121754\cad\greenhouse\greenhouse\A300 Hwy Layout - MOP.dwg
Plot by: GVillalobos Feb 21, 2024 - 11:14am

IDENTIFICATION STAMP
DIV. OF THE STATE ARCHITECT
APP: 02-121754 INC:
REVIEWED FOR
SS ☐ FLS ☐ ACS ☑
DATE: 02/21/2024

FOR DSA USE ONLY

DSA APP# 02-121754

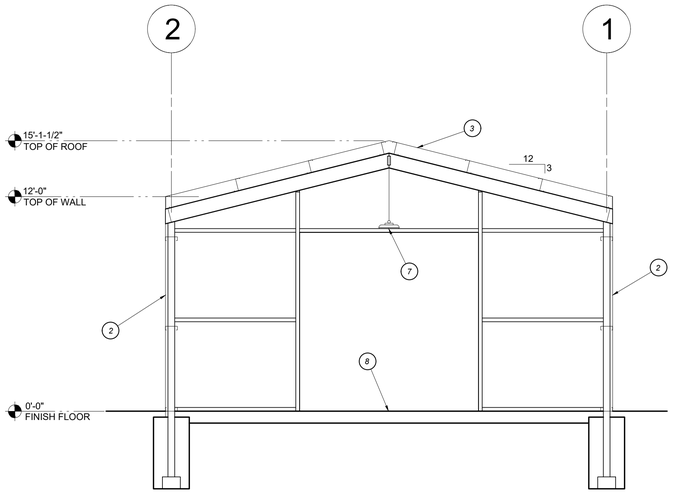

A
A301
BUILDING SECTION
1/14" = 1'-0" NOTE: THIS WORK IS EXEMPT FROM DSA STRUCTURAL SAFETY AND FIRE LIFE SAFETY REVIEW PER DSA IR A-22 SECTION 1.2.1 AND 2.1.2

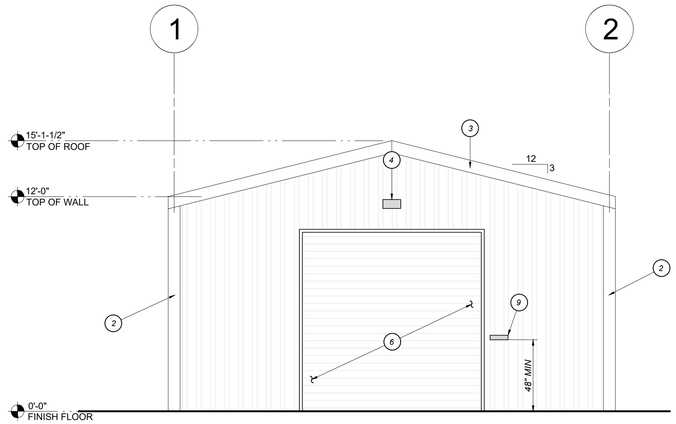

B
A301
SOUTH EXTERIOR ELEVATION
1/14" = 1'-0" NOTE: THIS WORK IS EXEMPT FROM DSA STRUCTURAL SAFETY AND FIRE LIFE SAFETY REVIEW PER DSA IR A-22 SECTION 1.2.1 AND 2.1.2

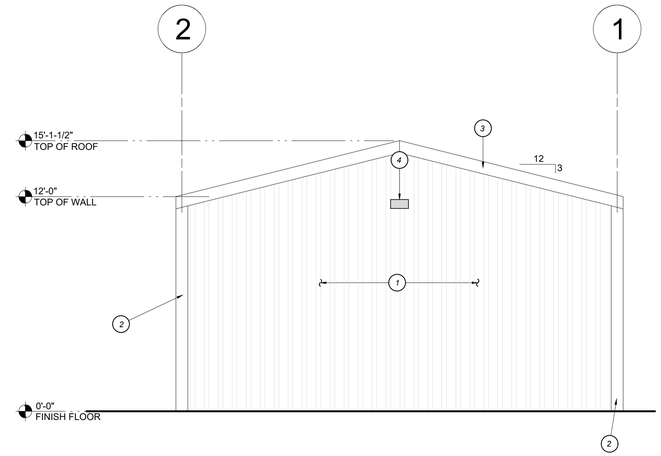

C
A301
NORTH EXTERIOR ELEVATION
1/14" = 1'-0" NOTE: THIS WORK IS EXEMPT FROM DSA STRUCTURAL SAFETY AND FIRE LIFE SAFETY REVIEW PER DSA IR A-22 SECTION 1.2.1 AND 2.1.2

KEYNOTES

1. *METAL PANEL. TYPE 1: BORGA HR345 PANEL. COLOR: TO BE SELECTED BY OWNER*
2. *METAL TRIM. SEE DETAILS FOR ADDITIONAL INFORMATION.*
3. *METAL ROOF. BORGA SUPER PANEL. 26 GAUGE, COLOR ZINCALUME AZ55 PLUS.*
4. *WALLPACK LIGHT FIXTURE, SEE ELECTRICAL PLANS*
5. *3' X 7' METAL DOOR*
6. *10' X 10' METAL ROLL-UP DOOR*
7. *HIGH-BAY LIGHT FIXTURE, SEE ELECTRICAL PLANS*
8. *INTERIOR CONCRETE SLAB PER DETAIL [A/X100], HEAVY BROOM FINISH.*
9. *MOUNT SIGN TO WALL ADJACENT TO ROLL UP DOOR THAT READS "MAINTENANCE ACCESS ONLY" SIGN SHALL BE WHITE BACKGROUND WITH 1" HIGH LETTERING THAT COMPLIES WITH SECTION 11B-703 OF THE CBC*

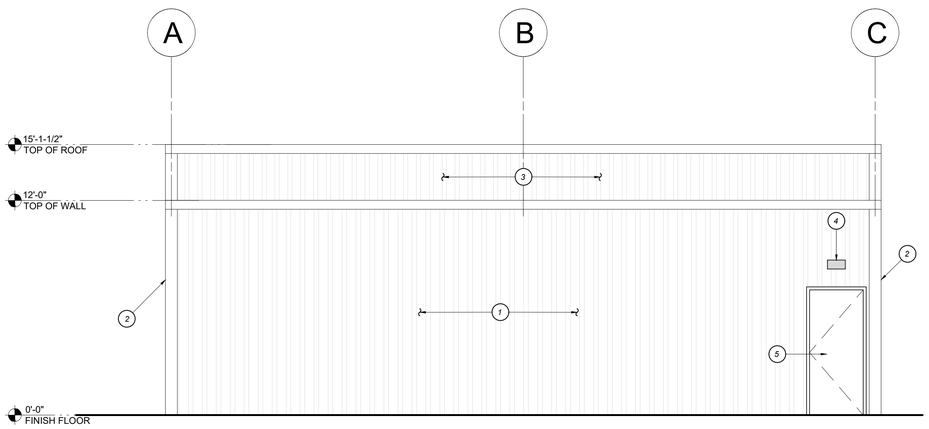

D
A301
WEST EXTERIOR ELEVATION
1/14" = 1'-0" NOTE: THIS WORK IS EXEMPT FROM DSA STRUCTURAL SAFETY AND FIRE LIFE SAFETY REVIEW PER DSA IR A-22 SECTION 1.2.1 AND 2.1.2

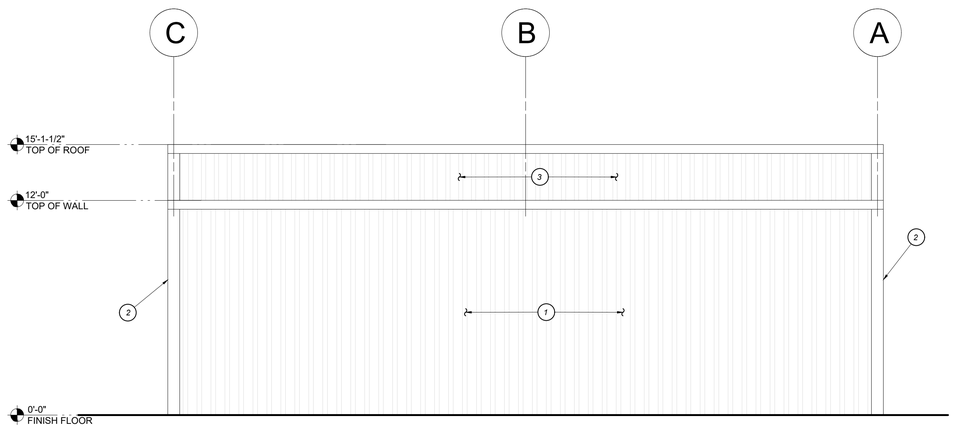

E
A301
EAST EXTERIOR ELEVATION
1/14" = 1'-0" NOTE: THIS WORK IS EXEMPT FROM DSA STRUCTURAL SAFETY AND FIRE LIFE SAFETY REVIEW PER DSA IR A-22 SECTION 1.2.1 AND 2.1.2

Blair, Church & Flynn
CONSULTING ENGINEERS

REGISTERED PROFESSIONAL ENGINEER
ZAHIT D. HAQUE
No. 87218
CIVIL
STATE OF CALIFORNIA
02/13/2024
Date Signed:

CONSULTANT
Blair, Church & Flynn Consulting Engineers
451 Clovis Avenue, Suite 200
Clovis, California 93612
Tel (559) 326-1400
Fax (559) 325-1500

REF. & REV.

MERCED COLLEGE GREENHOUSE COMPLEX

GREENHOUSE COMPLEX
AG STORAGE
ELEVATIONS & SECTION

CONST. DOCUMENTS

DR. BY: AH
CH. BY: ZH
DATE: 02/13/2024
SCALE AS NOTED

A301

Drawing: P:\2021\121754\greenhouse\greenhouse\121754_A301.dwg, Layout1, 8EDF.ctb
Plot by: GYlasiosa Feb 21, 2024 - 11:14am

IDENTIFICATION STAMP
DIV. OF THE STATE ARCHITECT
APP: 02-121754 INC:
REVIEWED FOR
SS ☐ FLS ☐ ACS ☑
DATE: 02/21/2024

FOR DSA USE ONLY

DSA APP# 02-121754

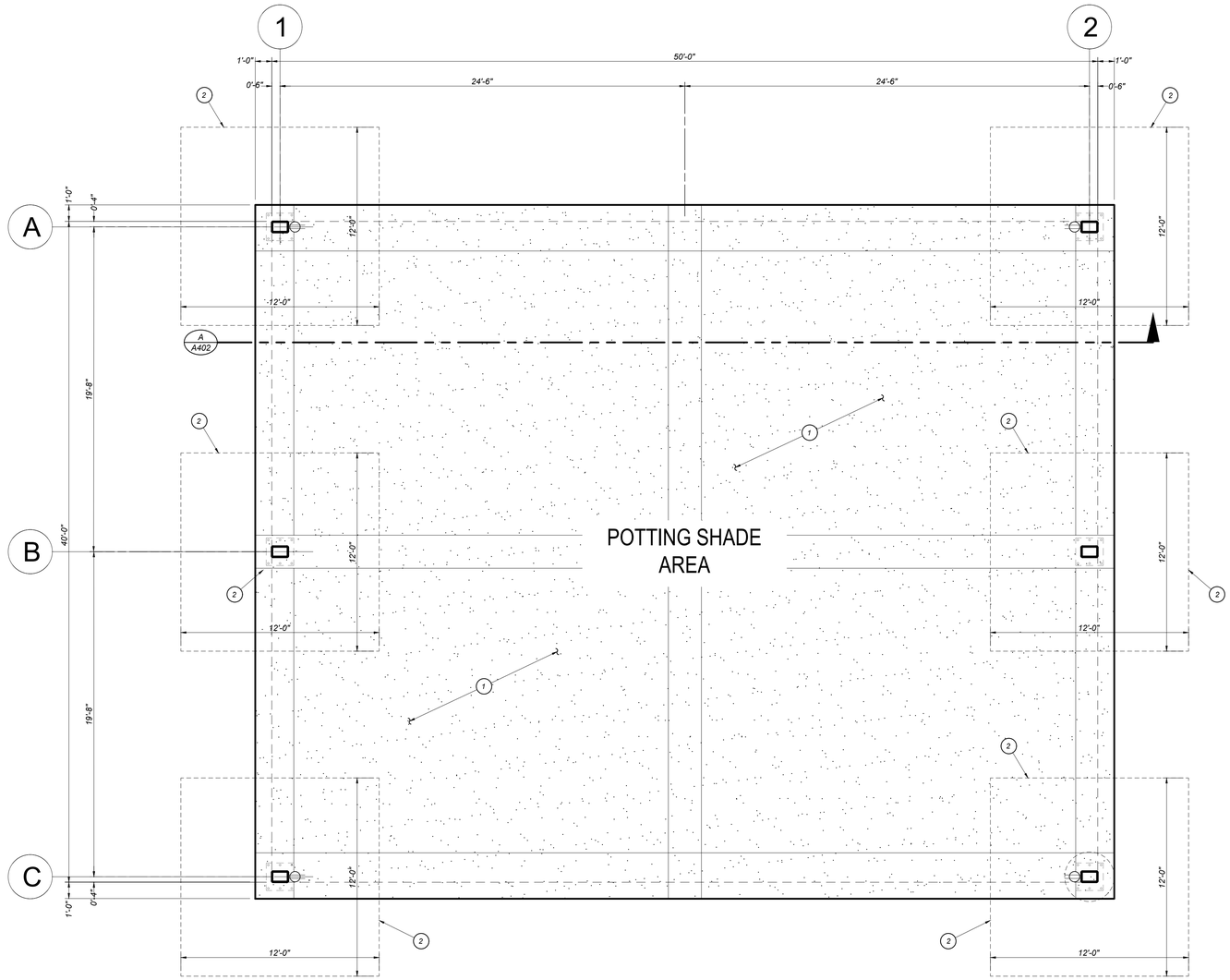

KEYNOTES

1. 4 INCH THICK 2500 PSI CONCRETE SLAB
2. 24 INCH DIAMETER X 48 INCH DEEP CONCRETE COLUMN FOOTING
3. 8 INCH WIDE CONCRETE FOOTING X 8 INCH DEEP WITH REBAR #4 HORIZONTAL
4. STRUCTURAL STEEL COLUMN. SEE STRUCTURAL PLANS FOR ADDITIONAL INFORMATION.
5. EXTERIOR WALL
6. 5/8 INCH DIAMETER HIGH STRENGTH CABLE AT SIDEWALL
7. 5/8 INCH DIAMETER HIGH STRENGTH CABLE AT ROOF
8. ROOF PURLIN WITH #12 FASTENERS
9. 3' X 7' METAL DOOR
10. 10' X 10' METAL DOOR
11. ELECTRICAL PANEL

A / A400 PROPOSED POTTING SHADE FOUNDATION AND FLOOR PLAN

1/4" = 1'-0" NOTE: THIS WORK IS EXEMPT FROM DSA STRUCTURAL SAFETY AND FIRE LIFE SAFETY REVIEW PER DSA IR A-22 SECTION 1.2.1 AND 2.1.2

N

Blair, Church & Flynn
CONSULTING ENGINEERS

REGISTERED PROFESSIONAL ENGINEER
ANTHONY D. KIRKPATRICK
No. 87218
CIVIL
STATE OF CALIFORNIA
02/13/2024
Date Signed:

CONSULTANT
Blair, Church & Flynn
Consulting Engineers
451 Clovis Avenue,
Suite 200
Clovis, California 93612
Tel (559) 326-1400
Fax (559) 326-1500

REF. & REV.

MERCED COLLEGE GREENHOUSE COMPLEX

GREENHOUSE COMPLEX
POTTING SHADE
FLOOR & FOUNDATION PLAN

CONST. DOCUMENTS

DR. BY: AH
CH. BY: ZH
DATE: 02/13/2024
SCALE AS NOTED

A400

Drawing: 2122-01 G:\Projects\Active\Merced\2122014_CP\CD\01dwg LAYOUT - A400 PB
Plot by: GYlescas Feb 21, 2024 - 11:14am

IDENTIFICATION STAMP
DIV. OF THE STATE ARCHITECT
APP: 02-121754 INC:
REVIEWED FOR
SS ☐ FLS ☐ ACS ☑
DATE: 02/21/2024

FOR DSA USE ONLY

DSA APP# 02-121754

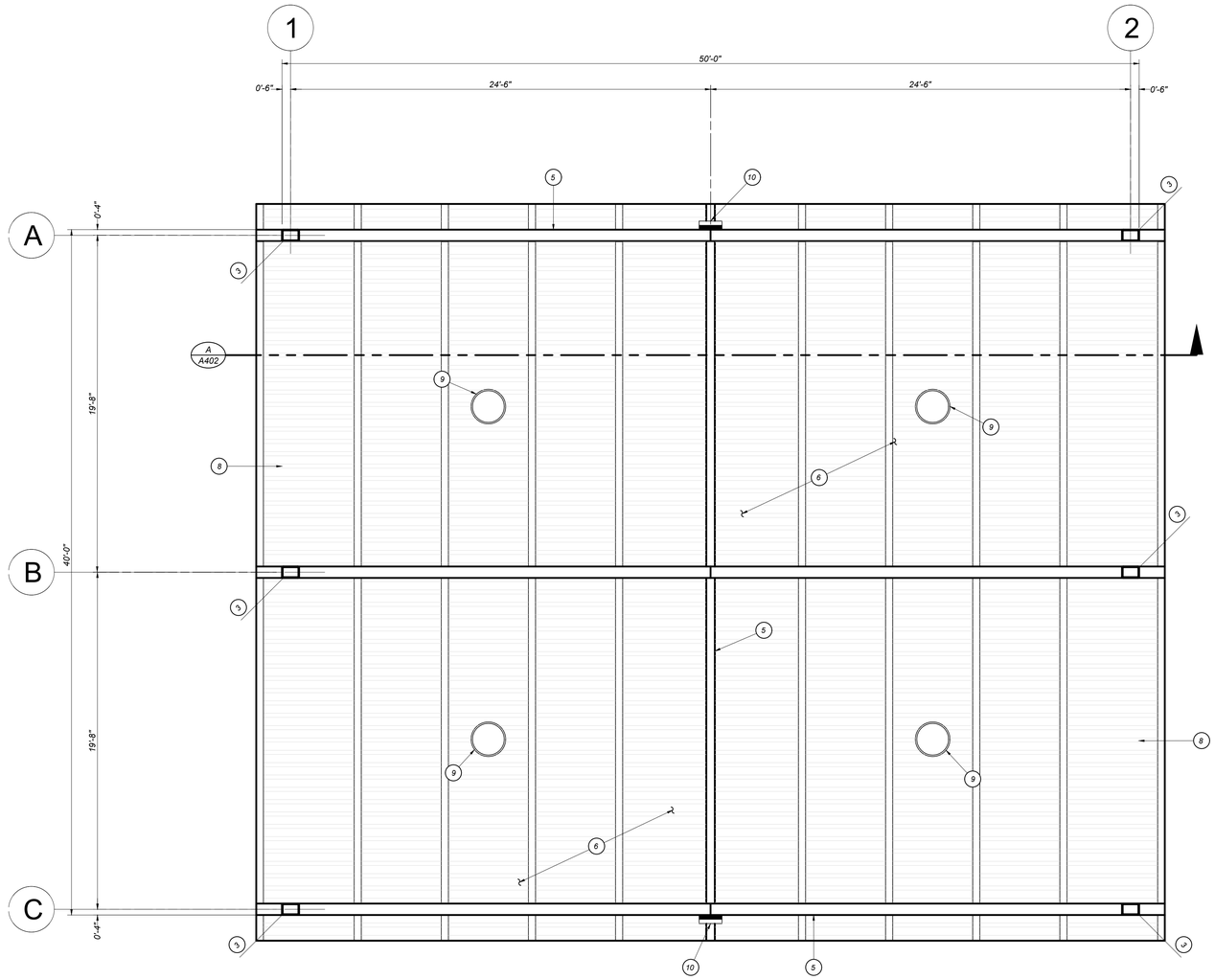

KEYNOTES

1. 4 INCH THICK 2500 PSI CONCRETE SLAB
2. 36 INCH DIAMETER X 54 INCH DEEP CONCRETE COLUMN FOOTING
3. STRUCTURAL STEEL COLUMN. SEE STRUCTURAL PLANS FOR ADDITIONAL INFORMATION.
4. STRUCTURAL STEEL COLUMN. SEE STRUCTURAL PLANS FOR ADDITIONAL INFORMATION.
5. W14 X 22 STEEL BEAM
6. 8"X 2-1/2" 14 GA Z ROOF PURLIN - TYP.
7. 26 GA RIBBED METAL SHEETING
8. 7" WIDE ROOF GUTTER WITH 10 WIDE GRATE
9. LED HIGH BAY FIXTURE
10. 100 W LED WALLPACK LIGHT

A / A401 PROPOSED POTTING SHADE REFLECTED CEILING PLAN

1/4" = 1'-0" NOTE: THIS WORK IS EXEMPT FROM DSA STRUCTURAL SAFETY AND FIRE LIFE SAFETY REVIEW PER DSA IR A-22 SECTION 1.2.1 AND 2.1.2

N

Blair, Church & Flynn
CONSULTING ENGINEERS

REGISTERED PROFESSIONAL ENGINEER
JERRY D. HOLT
No. 37218
CIVIL
STATE OF CALIFORNIA
02/13/2024
Date Signed:

CONSULTANT
Blair, Church & Flynn
Consulting Engineers
451 Clovis Avenue,
Suite 200
Clovis, California 93612
Tel (559) 326-1400
Fax (559) 326-1500

REF. & REV.

MERCED COLLEGE GREENHOUSE COMPLEX

GREENHOUSE COMPLEX
POTTING SHADE
CEILING PLAN

CONST. DOCUMENTS

DR. BY: AH
CH. BY: ZH
DATE: 02/13/2024
SCALE AS NOTED

A401

Drawing: R:\2122123-Clayton-Gatton-Greenhouse\Architecture\2122123-A-PC001.dwg, Layout1 (3) - ARCH.dwg
Plot by: GVillalobos Feb 21, 2024 - 11:14am

IDENTIFICATION STAMP
DIV. OF THE STATE ARCHITECT
APP: 02-121754 INC:
REVIEWED FOR
SS ☐ FLS ☐ ACS ☑
DATE: 02/21/2024

FOR DSA USE ONLY

DSA APP# 02-121754

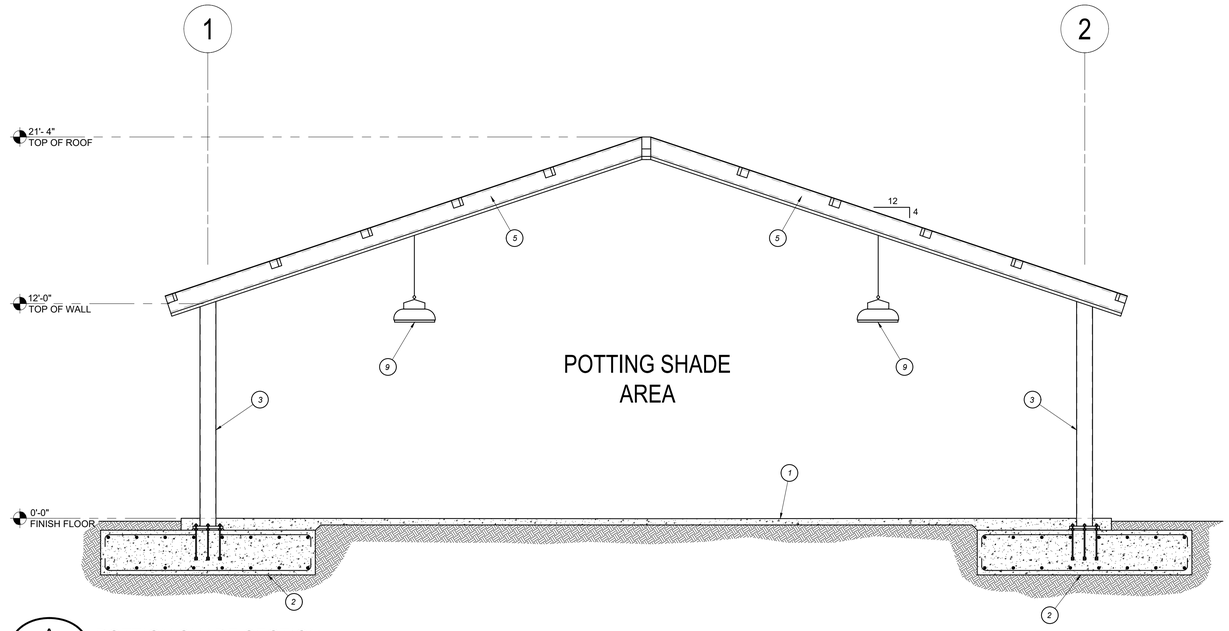

A / A402 POTTION SHADE SECTION

1/14" = 1'-0" NOTE: THIS WORK IS EXEMPT FROM DSA STRUCTURAL SAFETY AND FIRE LIFE SAFETY REVIEW PER DSA IR A-22 SECTION 1.2.1 AND 2.1.2

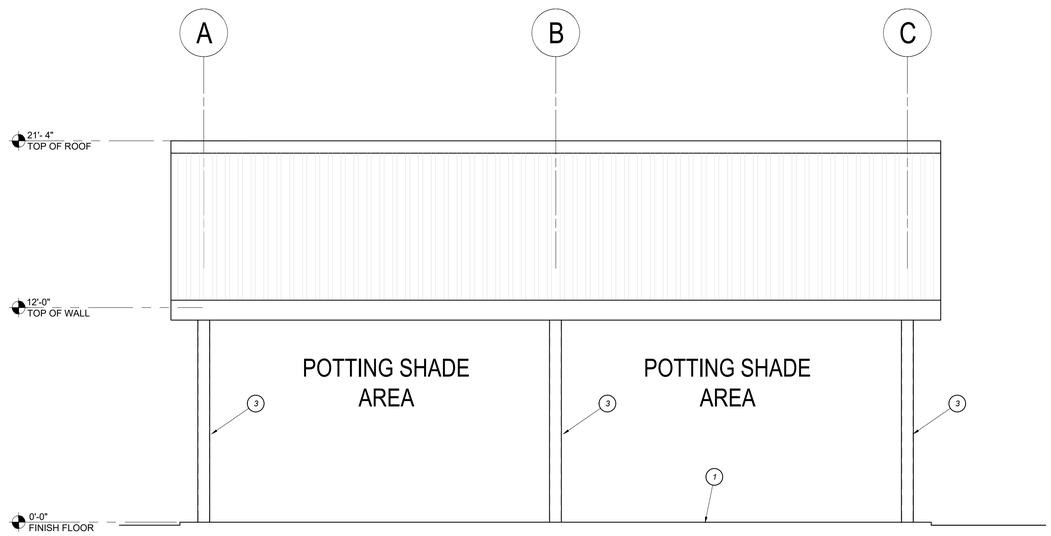

B / A402 SIDE EXTERIOR ELEVATION

1/14" = 1'-0" NOTE: THIS WORK IS EXEMPT FROM DSA STRUCTURAL SAFETY AND FIRE LIFE SAFETY REVIEW PER DSA IR A-22 SECTION 1.2.1 AND 2.1.2

KEYNOTES

1. *4 INCH THICK 2500 PSI CONCRETE SLAB*
2. *36 INCH DIAMETER X 54 INCH DEEP CONCRETE COLUMN FOOTING*
3. *STRUCTURAL STEEL COLUMN. SEE STRUCTURAL PLANS FOR ADDITIONAL INFORMATION.*
4. *STRUCTURAL STEEL COLUMN. SEE STRUCTURAL PLANS FOR ADDITIONAL INFORMATION.*
5. *W14 X 22 STEEL BEAM*
6. *8"X 2-1/2" 14 GA Z ROOF PURLIN - TYP.*
7. *26 GA RIBBED METAL SHEETING*
8. *7" WIDE ROOF GUTTER WITH 10 WIDE GRATE*
9. *LED HIGH BAY FIXTURE*

Blair, Church & Flynn
CONSULTING ENGINEERS

REGISTERED PROFESSIONAL ENGINEER
ROBERT D. ALLEN
No. 87218
CIVIL
STATE OF CALIFORNIA
02/13/2024
Date Signed:

CONSULTANT
Blair, Church & Flynn
Consulting Engineers
451 Clovis Avenue,
Suite 200
Clovis, California 93612
Tel (559) 326-1400
Fax (559) 325-1500

REF. & REV.

MERCED COLLEGE GREENHOUSE COMPLEX

GREENHOUSE COMPLEX
POTTING SHADE
ELEVATION & SECTION

CONST. DOCUMENTS

DR. BY: AH
CH. BY: ZH
DATE: 02/13/2024
SCALE AS NOTED

A402

Drawing: P:\2021\21-0\Merced\Greenhouse\Greenhouse\121754_PO\001\dwg\ Layout1 (3) - BDP.rvb
Plot by: GYlasiosa Feb 21, 2024 - 11:14am

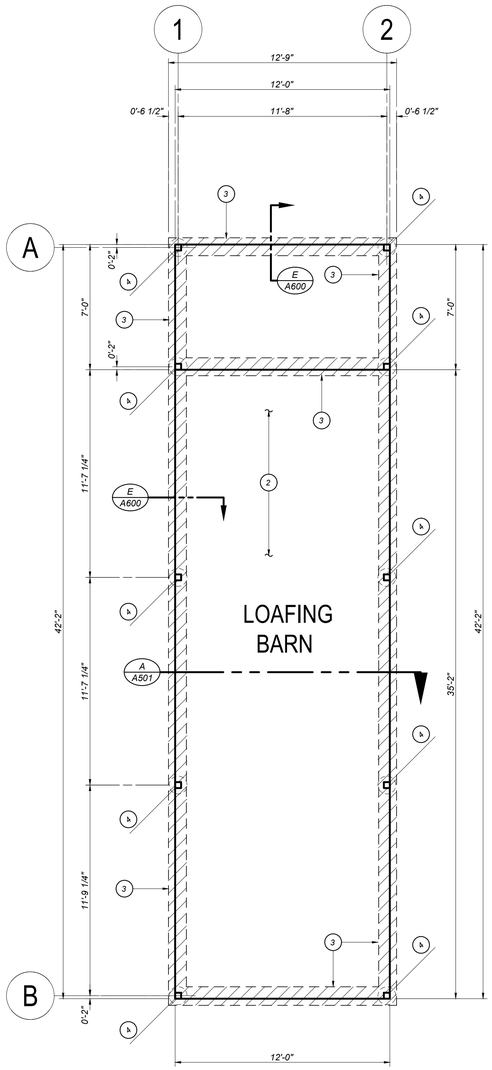

A / A500 PROPOSED LOAFING BARN FOUNDATION PLAN

1/4" = 1'-0" NOTE: THIS WORK IS EXEMPT FROM DSA STRUCTURAL SAFETY AND FIRE LIFE SAFETY REVIEW PER DSA IR A-22 SECTION 1.2.1 AND 2.1.2

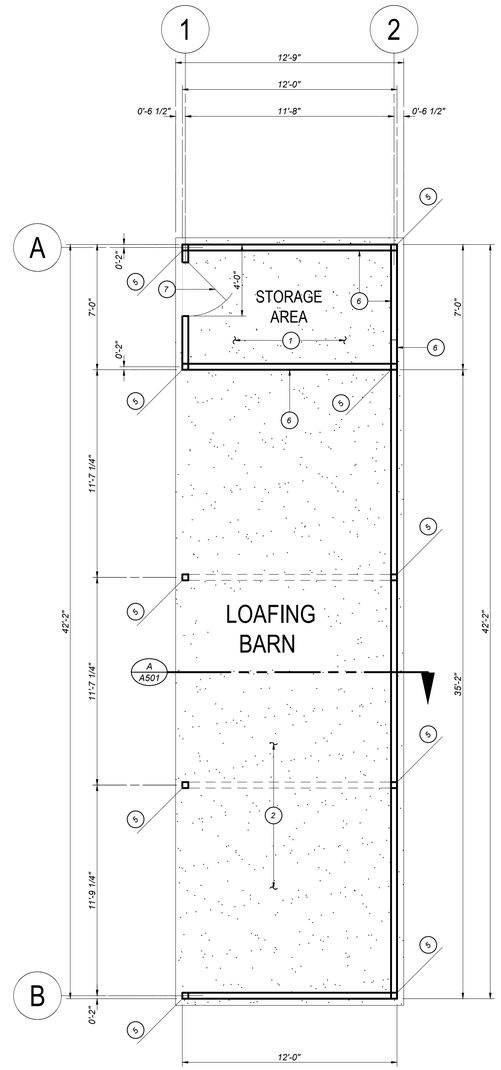

B / A500 PROPOSED LOAFING BARN FLOOR PLAN

1/4" = 1'-0" NOTE: THIS WORK IS EXEMPT FROM DSA STRUCTURAL SAFETY AND FIRE LIFE SAFETY REVIEW PER DSA IR A-22 SECTION 1.2.1 AND 2.1.2

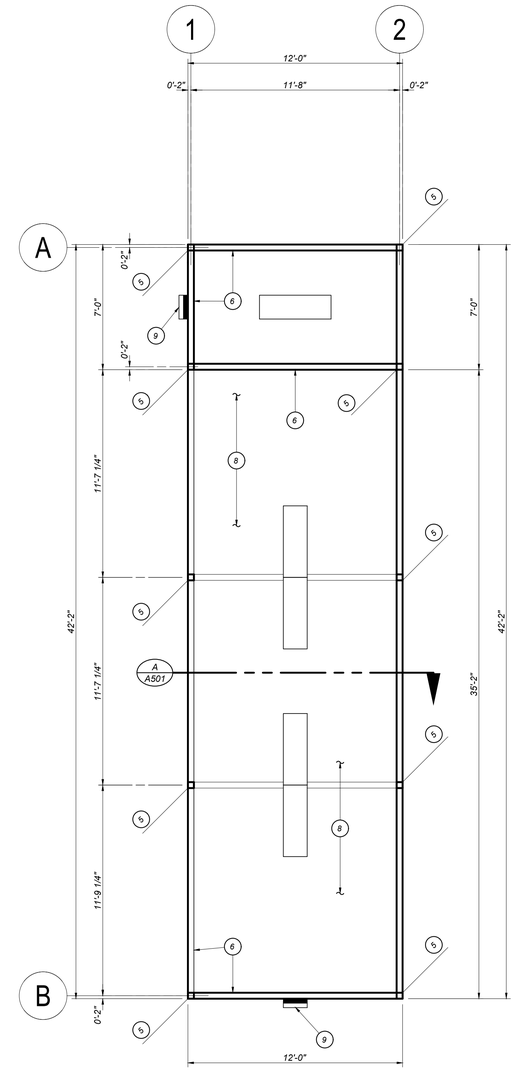

C / A500 PROPOSED LOAFING BARN REFLECTED CEILING PLAN

1/4" = 1'-0" NOTE: THIS WORK IS EXEMPT FROM DSA STRUCTURAL SAFETY AND FIRE LIFE SAFETY REVIEW PER DSA IR A-22 SECTION 1.2.1 AND 2.1.2

KEYNOTES

1. *4 INCH THICK 2500 PSI CONCRETE SLAB*
2. *HEAVY DUTY CONCRETE SLAB*
3. *12 INCH WIDE CONCRETE FOOTING X 12 INCH DEEP WITH REBAR #4 TOP AND BOTTOM*
4. *12 INCH DIAMETER X 24 INCH DEEP CONCRETE COLUMN FOOTING*
5. *STRUCTURAL STEEL COLUMN. SEE STRUCTURAL PLANS FOR ADDITIONAL INFORMATION.*
6. *EXTERIOR WALL*
7. *36" WIDE 80" HEIGHT DOOR*
8. *29 GAUGE SHEET METAL PANELS*
9. *100 W LED WALLPACK LIGHT*

IDENTIFICATION STAMP
DIV. OF THE STATE ARCHITECT
APP: 02-121754 INC:
REVIEWED FOR
SS ☐ FLS ☐ ACS ☑
DATE: 02/21/2024

FOR DSA USE ONLY

DSA APP# 02-121754

Blair, Church & Flynn
CONSULTING ENGINEERS

REGISTERED PROFESSIONAL ENGINEER
JERRY D. HUNTER
No. 37218
CIVIL
STATE OF CALIFORNIA
02/13/2024
Date Signed:

CONSULTANT
Blair, Church & Flynn
Consulting Engineers
451 Clovis Avenue,
Suite 200
Clovis, California 93612
Tel (559) 326-1400
Fax (559) 326-1500

REF. & REV.

MERCED COLLEGE GREENHOUSE COMPLEX

GREENHOUSE COMPLEX
LOAFING BARN
FOUNDATION & FLOOR & CEILING PLANS

CONST. DOCUMENTS

DR. BY: AH
CH. BY: ZH
DATE: 02/13/2024
SCALE AS NOTED

A500

Drawing: S:\2022\22-03\projectdirectory\projectfiles\121754_DSA\Dwg\ Layout1 - BCF.dwg
Plot by: GVillalobos Feb 21, 2024 - 11:14am

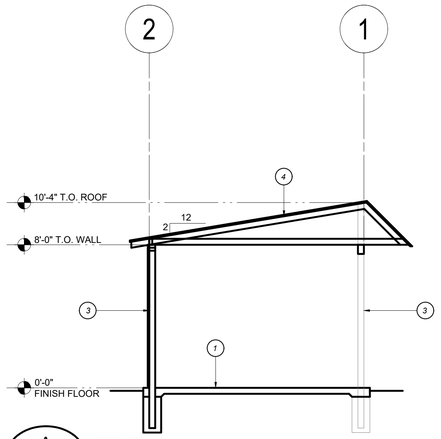

A SECTION
A501
1/14" = 1'-0" NOTE: THIS WORK IS EXEMPT FROM DSA STRUCTURAL SAFETY AND FIRE LIFE SAFETY REVIEW PER DSA IR A-22 SECTION 1.2.1 AND 2.1.2

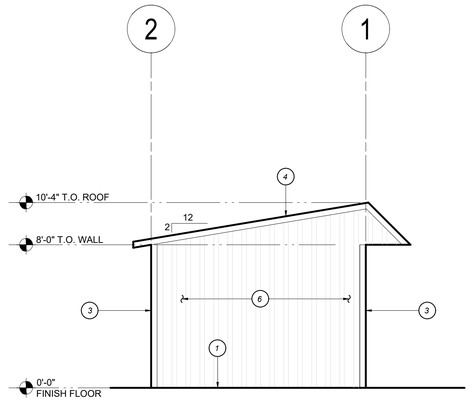

B NORTH EXTERIOR ELEVATION
A501
1/14" = 1'-0" NOTE: THIS WORK IS EXEMPT FROM DSA STRUCTURAL SAFETY AND FIRE LIFE SAFETY REVIEW PER DSA IR A-22 SECTION 1.2.1 AND 2.1.2

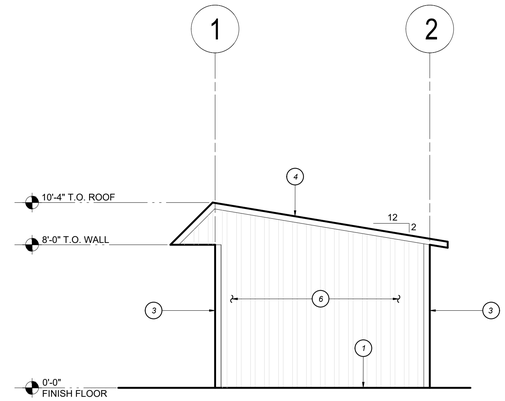

C SOUTH EXTERIOR ELEVATION
A501
1/14" = 1'-0" NOTE: THIS WORK IS EXEMPT FROM DSA STRUCTURAL SAFETY AND FIRE LIFE SAFETY REVIEW PER DSA IR A-22 SECTION 1.2.1 AND 2.1.2

KEYNOTES

1. *4 INCH THICK 2500 PSI CONCRETE SLAB*
2. *12 INCH DIAMETER X 24 INCH DEEP CONCRETE COLUMN FOOTING*
3. *2" X 3" 14 & 15 GAUGE TUBING GALVANIZED STEEL*
4. *29 GAUGE ROOF SHEET METAL*
5. *STRUCTURAL STEEL COLUMN. SEE STRUCTURAL PLANS FOR ADDITIONAL INFORMATION.*
6. *29 GAUGE WALL SHEET METAL*
7. *36" WIDE 80" HEIGHT DOOR*

IDENTIFICATION STAMP
DIV. OF THE STATE ARCHITECT
APP: 02-121754 INC:
REVIEWED FOR
SS ☐ FLS ☐ ACS ☑
DATE: 02/21/2024

FOR DSA USE ONLY

DSA APP# 02-121754

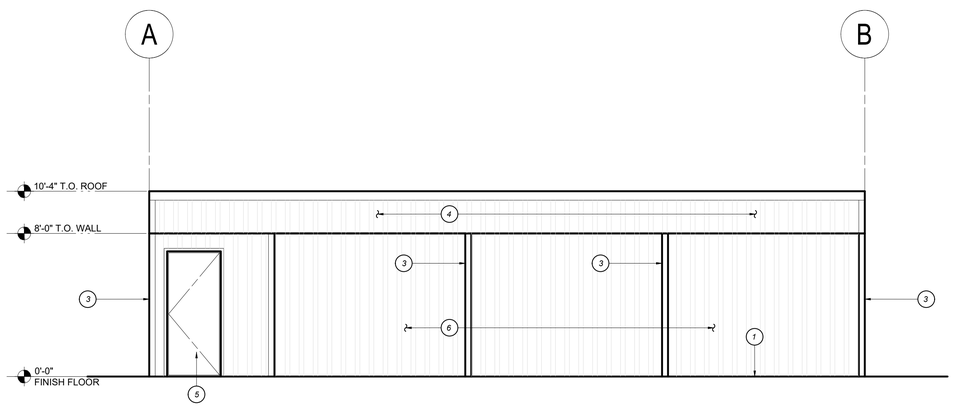

D WEST EXTERIOR ELEVATION
A501
1/14" = 1'-0" NOTE: THIS WORK IS EXEMPT FROM DSA STRUCTURAL SAFETY AND FIRE LIFE SAFETY REVIEW PER DSA IR A-22 SECTION 1.2.1 AND 2.1.2

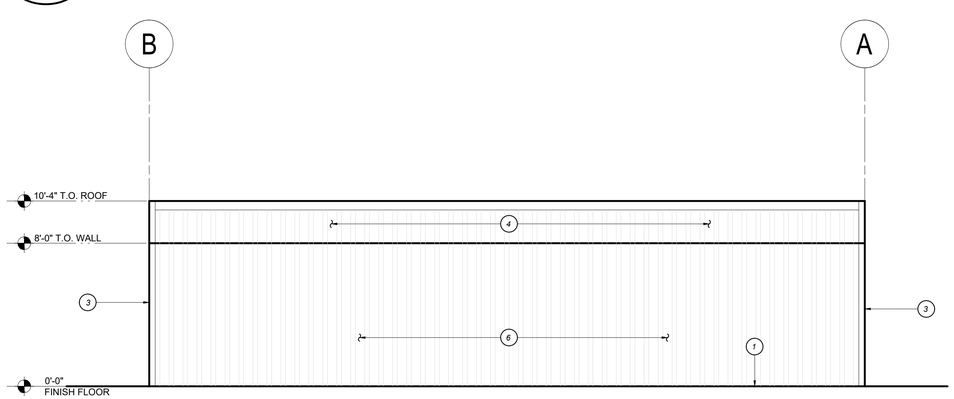

E WEST EXTERIOR ELEVATION
A501
1/14" = 1'-0" NOTE: THIS WORK IS EXEMPT FROM DSA STRUCTURAL SAFETY AND FIRE LIFE SAFETY REVIEW PER DSA IR A-22 SECTION 1.2.1 AND 2.1.2

Blair, Church & Flynn
CONSULTING ENGINEERS

REGISTERED PROFESSIONAL ENGINEER
JERRY D. HOLLAND
No. 87218
CIVIL
STATE OF CALIFORNIA
02/13/2024
Date Signed

CONSULTANT
Blair, Church & Flynn
Consulting Engineers
451 Clovis Avenue,
Suite 200
Clovis, California 93612
Tel (559) 326-1400
Fax (559) 326-1500

REF. & REV.

MERCED COLLEGE GREENHOUSE COMPLEX

GREENHOUSE COMPLEX
LOAFING BARN
ELEVATIONS & SECTION

CONST. DOCUMENTS

DR. BY: AH
CH. BY: ZH
DATE: 02/13/2024
SCALE AS NOTED

A501

Drawing: P:\2022\122022\Greenhouse\Greenhouse\2023\14_LBR\Dwg Layout\1 (3) - PDF.dwg
Plot by: GVilleboos Feb 21, 2024 - 11:14am

IDENTIFICATION STAMP
DIV. OF THE STATE ARCHITECT
APP: 02-121754 INC:
REVIEWED FOR
SS ☐ FLS ☐ ACS ☑
DATE: 02/21/2024

FOR DSA USE ONLY

DSA APP# 02-121754

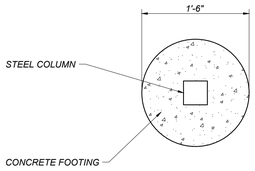

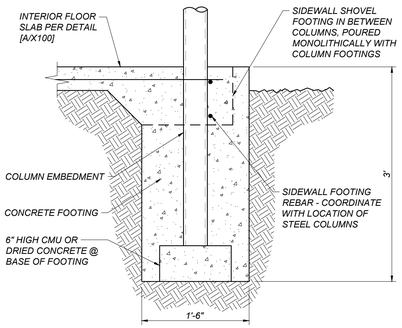

A / A600 LARGE GREENHOUSE COLUMN FOOTING

NOT TO SCALE
NOTE: THIS WORK IS EXEMPT FROM DSA STRUCTURAL SAFETY AND FIRE LIFE SAFETY REVIEW PER DSA IR A-22 SECTION 1.2.1 AND 2.1.2

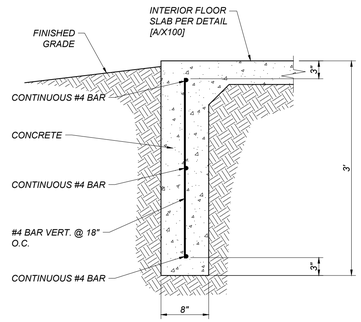

B / A600 ENDWALL FOOTING

NOT TO SCALE
NOTE: THIS WORK IS EXEMPT FROM DSA STRUCTURAL SAFETY AND FIRE LIFE SAFETY REVIEW PER DSA IR A-22 SECTION 1.2.1 AND 2.1.2

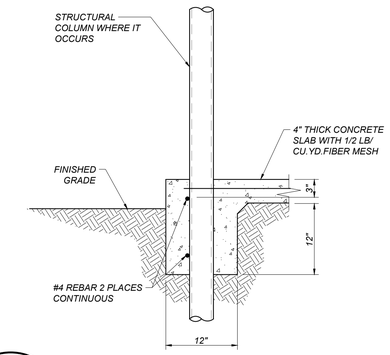

C / A600 PERIMETER FOOTING

NOT TO SCALE
NOTE: THIS WORK IS EXEMPT FROM DSA STRUCTURAL SAFETY AND FIRE LIFE SAFETY REVIEW PER DSA IR A-22 SECTION 1.2.1 AND 2.1.2

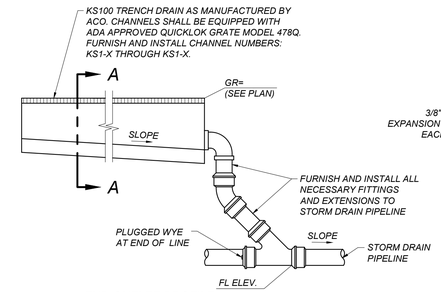

END OUTLET PROFILE

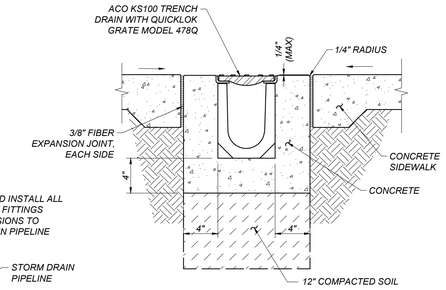

SECTION A-A

D / A600 TRENCH DRAIN

NOT TO SCALE NOTE: THIS WORK IS EXEMPT FROM DSA STRUCTURAL SAFETY AND FIRE LIFE SAFETY REVIEW PER DSA IR A-22 SECTION 1.2.1 AND 2.1.2

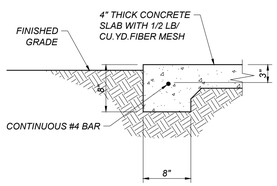

E / A600 SIDEWALL FOOTING

NOT TO SCALE
NOTE: THIS WORK IS EXEMPT FROM DSA STRUCTURAL SAFETY AND FIRE SAFETY AND FIRE LIFE SAFETY REVIEW PER DSA IR A-22 SECTION 1.2.1 AND 2.1.2

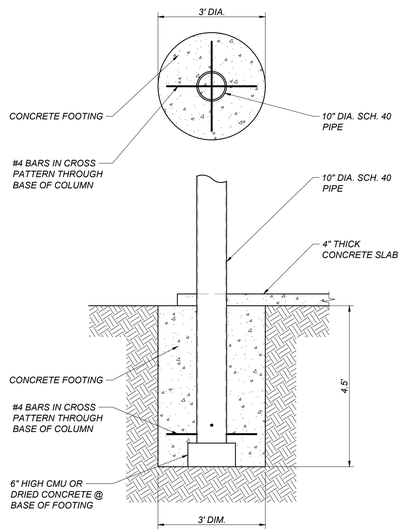

F / A600 COLUMN FOOTING

NOT TO SCALE
NOTE: THIS WORK IS EXEMPT FROM DSA STRUCTURAL SAFETY AND FIRE SAFETY AND FIRE LIFE SAFETY REVIEW PER DSA IR A-22 SECTION 1.2.1 AND 2.1.2

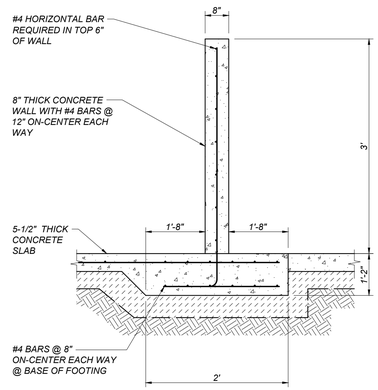

G / A600 END WALL SECTION

NOT TO SCALE
NOTE: THIS WORK IS EXEMPT FROM DSA STRUCTURAL SAFETY AND FIRE SAFETY AND FIRE LIFE SAFETY REVIEW PER DSA IR A-22 SECTION 1.2.1 AND 2.1.2

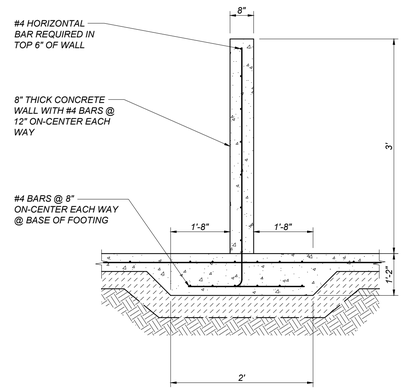

H / A600 MIDDLE WALL SECTION

NOT TO SCALE
NOTE: THIS WORK IS EXEMPT FROM DSA STRUCTURAL SAFETY AND FIRE SAFETY AND FIRE LIFE SAFETY REVIEW PER DSA IR A-22 SECTION 1.2.1 AND 2.1.2

Blair, Church & Flynn
CONSULTING ENGINEERS

REGISTERED PROFESSIONAL ENGINEER
ZAYNT D. HUSAIN
No. 87218
CIVIL
STATE OF CALIFORNIA
02/13/2024
Date Signed:

CONSULTANT
Blair, Church & Flynn Consulting Engineers
451 Clovis Avenue, Suite 200
Clovis, California 93612
Tel (559) 326-1400
Fax (559) 325-1500

REF. & REV.

MERCED COLLEGE GREENHOUSE COMPLEX

GREENHOUSE COMPLEX
FOUNDATION DETAILS

CONST. DOCUMENTS

DR. BY: AH
CH. BY: ZH
DATE: 02/13/2024
SCALE AS NOTED

A600

Drawing: P:\2021\21-03\greenhouse\greenhouse-v23\14_Cad\Arch\Site Details - HDR.dwg
Plot by: GYataccios Feb 21, 2024 - 11:14am

GENERAL NOTES

1. CODE COMPLIANCE: ALL WORK SHALL CONFORM TO AND BE PERFORMED IN ACCORDANCE WITH CODES, STANDARDS, AND ORDINANCES AS SET FORTH BY THE AUTHORITIES HAVING JURISDICTION AND THEIR LATEST ADOPTED EDITIONS (IN EFFECT AT TIME OF BUILDING PERMIT APPLICATION) OF THE FOLLOWING PUBLICATIONS:

   A. CALIFORNIA CODE OF REGULATIONS TITLE 24; INCLUDES 2022 CALIFORNIA ELECTRICAL CODE, 2022 CALIFORNIA FIRE CODE, 2022 CALIFORNIA BUILDING CODE, ETC. WITH LOCAL AMENDMENTS AS APPLICABLE.

   B. AMERICANS WITH DISABILITIES ACT (ADA).

2. SAFETY: THE ELECTRICAL CONTRACTOR IS RESPONSIBLE TO MAINTAIN ALL EQUIPMENT IN A SAFE AND RESPONSIBLE MANNER. KEEP DEAD FRONT EQUIPMENT IN PLACE WHILE EQUIPMENT IS ENERGIZED. CONDUCT ALL CONSTRUCTION OPERATIONS IN A SAFE MANNER FOR EMPLOYEES AS WELL AS OTHER WORKPERSONS OR ANYONE VISITING THE JOB SITE. PROVIDE BARRIERS, FLAGS, TAPE, ETC. AS REQUIRED FOR SAFETY. THE CONTRACTOR SHALL HOLD ALL PARTIES HARMLESS OF NEGLIGENT SAFETY PRACTICES, WHICH MAY CAUSE INJURY TO OTHERS ON OR NEAR THE JOB SITE.

3. FIRE RATED ASSEMBLIES SHALL MAINTAIN RATINGS AS SPECIFIED IN THE CALIFORNIA BUILDING CODE CHAPTER 7. CONTRACTOR SHALL PROVIDE AND INSTALL PHYSICAL ENCLOSURE AROUND FIXTURES, PANELS, ETC. AS REQUIRED. ALL ASSEMBLIES TO BE PENETRATED SHALL BE INSTALLED WITH APPLICABLE THROUGH-PENETRATION FIRESTOP SYSTEM AS DETERMINED BY UL CLASSIFICATION. BEFORE CONSTRUCTION, VERIFY AND COMPLY WITH REQUIREMENTS OF LOCAL AUTHORITY HAVING JURISDICTION.

4. MOUNTING HEIGHTS SHALL BE AS FOLLOWS UNLESS OTHERWISE NOTED:

   +15" AFF: RECEPTACLES, TELEPHONE, TV & DATA OUTLETS. (MEASURED BOTTOM OF OUTLET BOX)
   +46" AFF: OUTLET ABOVE COUNTER (MEAUSRED TOP OF OUTLET BOX)
   +48" AFF: LIGHT SWITCHES. (MEASURED TOP OF OUTLET BOX)
   +48" AFF: FIRE ALARM MANUAL PULL STATIONS, T-STATS. (MEASURED TOP OF OUTLET BOX)
   THE LOWER OF +80" AFF TO BOTTOM OF LENS, OR 6" BELOW CEILING: FIRE ALARM VISUALS.

   ELECTRICAL SWITCHES: CONTROLS AND SWITCHES INTENDED TO BE USED BY THE OCCUPANT OF THE ROOM OR AREA TO CONTROL LIGHT AND RECEPTACLE OUTLETS, APPLIANCES OR COOLING, HEATING AND VENTILATING EQUIPMENT, SHALL BE LOCATED NO MORE THAN 48 INCHES MEASURED FROM THE TOP OF THE OUTLET BOX NOR LESS THAN 15 INCHES MEASURED FROM THE BOTTOM OF THE OUTLET BOX TO THE LEVEL OF THE FINISH FLOOR OR WORKING PLATFORM. [CBC 11B-308.1.1]

   ELECTRICAL RECEPTACLE OUTLETS: ELECTRICAL RECEPTACLE OUTLETS ON BRANCH CIRCUITS OF 30 AMPERES OR LESS AND COMMUNICATION SYSTEM RECEPTACLES SHALL BE LOCATED NO MORE THAN 48 INCHES MEASURED FROM THE TOP OF THE RECEPTACLE OUTLET BOX OR RECEPTACLE HOUSING NOR LESS THAN 15 INCHES MEASURED FROM THE BOTTOM OF THE RECEPTACLE OUTLET BOX OR RECEPTACLE HOUSING TO THE LEVEL OF THE FINISH FLOOR OR WORKING PLATFORM [CBC 11B-308.1.2]

   BEFORE ROUGH-IN, VERIFY ALL MOUNTING HEIGHTS AND EXACT LOCATIONS FOR ALL EQUIPMENT ELECTRICAL CONNECTIONS, STUB-UPS, RECEPTACLES, OUTLETS, ETC. WITH ARCHITECT OR OWNER. PLACE DEVICES LOCATED ABOVE COUNTERS, SHELVING, ETC. AND IN BATHROOMS SO AS NOT TO CONFLICT WITH EDGES OF WAINSCOTING, COUNTER SPLASH, SHELVING, ETC. ARCHITECTURAL SHEETS SHALL GOVERN.

4. LABEL PANELS, CABINETS, BACKBOARDS, MAIN DEVICES, SAFETY SWITCHES, CONTACTORS AND OTHER SPECIFICALLY DESIGNATED EQUIPMENT SHOWN ON PLANS. USE ENGRAVED LAMINATED PLASTIC NAMEPLATES ATTACHED BY SCREWS OR RIVETS. FOR FEEDERS, NEATLY AND INDELIBLY LABEL CONDUIT DESTINATIONS ON BOTH VISIBLE ENDS OF CONDUIT RUNS WHERE CONDUITS TERMINATE AT DESIGNATED ENCLOSURES, STRUCTURES OR EQUIPMENT (INCLUDING PULL AND SPLICE BOXES).

5. EQUIPMENT ANCHORAGE NOTE
   ALL MECHANICAL AND ELECTRICAL EQUIPMENT SHALL BE ANCHORED OR BRACED TO MEET THE HORIZONTAL AND VERTICAL FORCES PRESCRIBED IN THE 2022 CBC, SECTIONS 1613A AND 1616A AND ASCE 7-10 SECTIONS 13.3, 13.4 & 13.6.

   THE ATTACHMENT OF THE FOLLOWING ITEMS SHALL BE DESIGNED TO RESIST THE FORCES PRESCRIBED ABOVE, BUT NEED NOT BE DETAILED ON THE PLANS PER 202 CBC SECTION 1616A.1.18:

   A. FURNITURE(EXCEPT STORAGE CABINETS AS NOTED IN 2022 CBC TABLE 13.5-1)
   B. TEMPORARY OR MOVABLE EQUIPMENT WITH EXCEPTIONS NOTED IN 2022 CBC SECTION 1616A.1.18 ITEM 2.
   C. ARCHITECTURAL, MECHANICAL, AND ELECTRICAL COMPONENTS IN SEISMIC DESIGN CATEGORIES D, E, OR F
      THAT MEET ALL OF THE CRITERIA LISTED IN 2022 SECTION 1616A.1.18 ITEM 3.
   D. EQUIPMENT WEIGHING LESS THAN 20 POUNDS SUPPORTED BY VIBRATION ISOLATORS.
   E. EQUIPMENT WEIGHING LESS THAN 20 POUNDS SUSPENDED FROM A ROOF OR FLOOR OR HUNG FROM A
      WALL

   FOR THOSE ELEMENTS THAT DO NOT REQUIRE DETAILS ON THE APPROVED DRAWINGS, THE INSTALLATION SHALL BE SUBJECT TO THE APPROVAL OF THE MECHANICAL/ELECTRICAL ENGINEER.

6. <u>ELECTRICAL DISTRIBUTION SYSTEM BRACING NOTE.</u>

   PIPING, DUCTWORK AND ELECTRICAL DISTRIBUTION SYSTEMS SHALL BE BRACED TO COMPLY WITH THE FORCES AND DISPLACEMENTS PRESCRIBED IN ASCE 7-10 SECTION 13.3 AS DEFINED IN ASCE 7-16 SECTION 13.6.8, 13.6.7, 13.6.5.6 AND 2022 CBC, SECTIONS 1617A. 1.1 THROUGH 1617A.1.24.

   THE BRACING AND ATTACHMENTS TO THE STRUCTURE SHALL BE DETAILED ON THE APPROVED DRAWINGS OR THEY SHALL COMPLY WITH ONE OF THE HCAI PRE-APPROVALS (OPM#). I.E. OPM-0043-1 MASON-WEST.

   COPIES OF THE BRACING SYSTEM INSTALLATION GUIDE OR MANUAL SHALL BE AVAILABLE ON THE JOBSITE PRIOR TO THE START OF HANGING AND BRACING OF THE PIPE, DUCTWORK, AND ELECTRICAL DISTRIBUTION SYSTEMS.

   THE STRUCTURAL ENGINEER OF RECORD (SEOR) SHALL VERIFY THE ADEQUACY OF THE STRUCTURE TO SUPPORT THE HANGER AND BRACE LOADS.

7. CONDUIT SHALL NOT BE INSTALLED WITHIN CONCRETE SLABS UNLESS SPECIFICALLY NOTED.

MECHANICAL SYSTEMS

1. MECHANICAL UNIT CONDUITS: TO PREVENT DAMAGE DUE TO VIBRATION, BOTH POWER AND CONTROL WIRING CONDUITS FEEDING EXTERIOR MECHANICAL UNITS SHALL BE PROVIDED AND INSTALLED BY ELECTRICAL CONTRACTOR WITH LIQUID TIGHT FLEXIBLE TYPE AT FINAL CONNECTION TO UNIT AND BETWEEN ROOF JACK AND DISCONNECT SWITCH WHERE DISCONNECT IS MOUNTED ON UNIT.

2. MECHANICAL CONTROLS ROUGH-IN: PROVIDE AND INSTALL J-BOX, RING AND CONDUIT (SIZE ALL AS REQUIRED) FROM EACH MECHANICAL CONTROLS LOCATION TO CONTROLLED MECHANICAL UNITS.

3. MECHANICAL EQUIPMENT CONTROLS: MECHANICAL CONTRACTOR SHALL BE RESPONSIBLE FOR ALL LOW VOLTAGE WIRE AND CONNECTIONS (BELOW 120 VOLT) TO AND FROM ALL MECHANICAL CONTROL DEVICES. ALL LOW VOLTAGE CONTROL WIRE SHALL BE IN CONDUIT, UNLESS OTHERWISE NOTED.

LEGEND

NOTE: INTERPRET IN CONTEXT

LIGHT FIXTURES

- CEILING SURFACEMOUNT
- WALL SURFACEMOUNT
- PENDANT MOUNT
- RECESSED DOWNLIGHT
- RECESSED WALLWASH
- RECESSED FIXTURE
- SURFACE FIXTURE
- STRIP FIXTURE
- TRACK LIGHT
- DIRECTIONAL FLOOD
- EMERGENCY FIXTURE
- POLE LIGHT
- POLE LIGHT- DECORATIVE
- UPLIGHT- FLUSH IN GRADE
- BOLLARD
- TANDEM-WIRED LAMPS
- UNDERCABINET LIGHT
- WALL SURFACEMOUNT LINEAR TYPE
- PENDANT LINEAR FIXTURE
- RECESSED WALLMOUNT
- WALLPACK
- EXIT LIGHT- WALL
- EXIT LIGHT- CEILING (ARROW INDICATES DIRECTION)
- A LETTER ADJACENT INDICATES FIXTURE TYPE

SWITCHES

- $ SPST
- $2 DPST
- $3 3-WAY
- $4 4-WAY
- $D DIMMER
- $ TIMER SWITCH
- $T W/THERMAL OVERLOAD
- $P W/PILOT LIGHT
- $K KEY OPERATED
- $$ DUAL LEVEL SWITCHING
- ,a SWITCHLEG DESIGNATION
- OS OCCUPANCY SENSOR

POWER/COMM.

- SINGLE RECEPT.
- DUPLEX RECEPT.
- DUPLEX- HALF O.S. CNTRLD.
- DOUBLE DUPLEX, HALF O.S. CNTRLD.
- DOUBLE DUPLEX
- SPECIAL CONFIGURATION
- FLOORMOUNT 208V, 1Ø RECEPT
- DUPLEX- FLOOR OUTLET
- GROUND FAULT CIRCUIT INTERRUPT
- MOUNTED ABOVE COUNTER
- JUNCTION BOX
- TELEPHONE OUTLET
- DATA OUTLET
- PHONE/DATA COMBO OUTLET
- MOUNTED ABOVE COUNTER
- TV TELEVISION OUTLET
- SAFETY DISCONNECT
- DROP CORD RECEPT
- ABOVE-CLGMOUNT J-BOX
- TV TV OUTLET-FLOORMOUNT
- TELEPHONE FLOOR OUTLET
- DATA FLOOR OUTLET
- PHONE/DATA COMBO FLOOR OUTLET
- IDF INTERMEDIATE DISTRIBUTION FRAME
- MDF MAIN DISTRIBUTION FRAME
- AP ACCESS POINT

MISCELLANEOUS

- MOTOR
- T THERMOSTAT
- CIRCUIT BREAKER
- FUSIBLE SWITCH
- GROUND
- Ø PHASE
- CLOCK
- S CLOCK/SPEAKER COMBINATION
- WALL MOUNTED CLOCK
- PUSHBUTTON
- FLUSHMOUNT PANEL
- SURFACEMOUNT PANEL
- FLUSHMOUNT CABINET
- SURFACEMOUNT CABINET
- DAMPER MOTOR
- H HUMIDISTAT
- M MAGNETIC CONTACTOR
- COMBINATION STARTER

CONDUIT/WIRE

- NEW
- UNDERGROUND
- NEW POWER HOMERUN (3 HOTS & NEUT SHOWN)
- ISOLATED GROUND
- EXISTING TO REMAIN
- (E) POWER HOMERUN
- WIRE LINE- CONTINUES
- CONDUIT STUB (W/MARKER)
- VERTICAL CONDUIT RUN
- CONDUIT SEAL
- FLEXIBLE CONNECTION
- LOW VOLTAGE
- SURFACEMOUNT RACEWAY
- INDICATES LINE CONTINUES
- CORD W/PLUG

FIRE ALARM

- FIRE ALARM CONTROL PANEL
- RPS REMOTE POWER SUPPLY
- H HORN- AUDIBLE DEVICE
- V VISUAL- VISUAL DEVICE
- AV AUDIBLE/VISUAL
- SV SPEAKER/VISUAL
- F FLOW SWITCH
- T TAMPER SWITCH
- P MANUAL PULL STATION
- SD SMOKE DETECTOR
- SD D DUCT SMOKE DETECTOR
- SD CO SMOKE/CO DETECTOR
- H HEAT DETECTOR
- B BELL
- END OF LINE RESISTOR
- C CHIME

CONVENTIONS

- X NUMBERED SHEET NOTES: REFERS TO NOTES ON SAME SHEET AS REFERENCED
- 1 / 1 DETAIL REFERENCE: -DETAIL DESIGNATION -SHEET NUMBER REFERENCE
- 3103 FEEDER SCHEDULE DESIGNATION (EXAMPLE: 3103 = 310 AMPERE, 600V, 3 CURRENT CARRYING CONDUCTORS)

ABBREVIATIONS

A	AMPERE
AF	AMP FUSE RATING
AFF	ABOVE FINISH FLOOR
AFG	ABOVE FINISH GRADE
AIC	AMPERES INTERRUPT CAPACITY
AS	AMP SWITCH RATING
BFG	BELOW FINISH GRADE
CB	CIRCUIT BREAKER
CEC	CA. ELECTRICAL CODE
CKT	CIRCUIT
C	CONDUIT
C.O.	CONDUIT ONLY
(E)	EXISTING
EC	ELECTRICAL CONTRACTOR
EF-#	EXHAUST FAN
(EXN)	(E) IN (N) LOCATION
(EXR)	(E) TO BE (R)
(F)	FUTURE
FA	FIRE ALARM
FACP	FIRE ALARM CONTROL PANEL
G	GROUNDING CONDUCTOR
GC	GENERAL CONTRACTOR
GFI	GROUND FAULT CKT INTERRUPTER
GND	GROUND
GRS	GALVANIZED RIGID STEEL
GWS	GANGED WITH SWITCH
IG	ISOLATED GROUND
LTG	LIGHTING
MC	MECHANICAL CONTRACTOR
MCB	MAIN CIRCUIT BREAKER
MLO	MAIN LUGS ONLY
MSB	MAIN SWITCHBOARD
MTTB	MAIN TELEPHONE TERMINAL BOARD
(N)	NEW
NIC	NOT IN CONTRACT
NL	NIGHT LIGHT
P	POLE
PV	PHOTOVOLTAIC
(R)	RELOCATE(D)
(TBR)	TO BE REMOVED
TYP	TYPICAL
UC	UNDERCABINET
UG	UNDERGROUND
UON	UNLESS OTHERWISE NOTED
V	VOLT
VA	VOLT AMPERES
W	WATT, WIRE
WP	WEATHERPROOF (NEMA 3R)

IDENTIFICATION STAMP
DIV. OF THE STATE ARCHITECT
APP: 02-121754 INC:
REVIEWED FOR
SS ☐ FLS ☐ ACS ☑
DATE: 02/21/2024

LUMINAIRE SCHEDULE

for MERCED COLLEGE GREEN HOUSE

TE# 23-8061

Δ	TYPE	ILLUSTRATION	MANUFACTURER	CATALOG NUMBER	VOLTAGE	TOTAL INPUT WATTS (W)	LAMP TYPE	NOMINAL LUMEN OUTPUT (L)	LAMP COLOR TEMP (K)	MOUNTING TYPE	DESCRIPTION	REMARKS
	A1		LITHONIA	JEBL 18000LM FRGL MVOLT 40K 80CRI WBF CS6G16 STOW5D SBOR10	120-277V	135	LED	18000	4000	PENDANT	13" DIA, LED ROUND HIGH BAY, FROSTED GLASS LENS, WET LISTED, IP65, NSF RATED. 0-10V DIMMING, INTEGRAL OCC SNSOR	
	C1		BEGHELLI	BS100LED-X 4FT HT HO WT40 120V-277V CH w/ EOSL2 LOG ESRPL	120-277V	100	LED	12196	4000	SUSPENDED, CHAIN HUNG	VAPOR-TIGHT LED LIGHT WITH FIXTURE MOUNTED MOTION WIRELESS CONTROL NODE, OCC. SENSOR WITH DAYLIGHT HARVESTING.	PROVIDE QTY. OF COMPATABLE WIRELESS DIMMING CONTROL SWITCHES PER PLANS.
	C2		BEGHELLI	BS100LED-X 4FT HT LO WT40 120V-277V CH w/ EOSL2 LOG ESRPL	120-277V	80	LED	10560	4000	SUSPENDED, CHAIN HUNG	VAPOR-TIGHT LED LIGHT WITH FIXTURE MOUNTED MOTION WIRELESS CONTROL NODE, OCC. SENSOR WITH DAYLIGHT HARVESTING.	PROVIDE QTY. OF COMPATABLE WIRELESS DIMMING CONTROL SWITCHES PER PLANS.
	EM 1		BEGHELLI	TA PLUS LED SE UNV AT SL, WALL	120-277V	10	LED	1444	4000	SURFACE, WALL	WALL MOUNTED EM UNIT W/ 90-MINUTE BACKUP BATTERY. WET LISTED, NSF RATED.	
	EM 2		BEGHELLI	TA PLUS LED SE UNV AT SL, CEILING	120-277V	10	LED	1491	4000	SURFACE, CEILING	CEILING MOUNTED EM UNIT W/ 90-MINUTE BACKUP BATTERY. WET LISTED, NSF RATED.	
	S1		LITHONIA	WDGE2 LED P2SW 40K 80CRI VW MVOLT SRM_PIRIFC3V DDBXD	120-277V	15	LED	2023	4000	SURFACE, WALL	LED WALL PACK WITH CUT-OFF DISTRIBUTION, INTEGRAL PHOTOCONTROL & BI-LEVEL MOTION SENSOR.	
	S1E		LITHONIA	WDGE2 LED P2SW 40K 80CRI VW MVOLT SRM_PIRIFC3V DDBXD E10WH	120-277V	15	LED	2023	4000	SURFACE, WALL	TYPE S1E IS THE SAME AS S1 EXCEPT WITH INTERGRAL EMERGENCY BATTERY	
	S2		LITHONIA	DSXF3 LED 6 P2 40K 70CRI WFL MVOLT YKC62 PE DDBXD	120-277V	138	LED	21005	4000	SURFACE, WALL	LED FLOOD LIGHT WITH WIDE FLOOD DISTRIBUTION & INTEGRAL PHOTOCONTROL	

ISSUE DATE: 8/10/2023
REV. DATE: .....

NOTES
- LUMINAIRE SUPPLIED VOLTAGE TO BE VERIFIED BY ELECTRICAL CONTRACTOR.
- WHERE NOT SPECIFIED; FINISHES TO BE VERIFIED WITH DISTRICT.

thoma ENGINEERING
THOMA ELECTRIC, INC.
P.O. Box 1167 - 3562 Empleo St.
San Luis Obispo, CA 93406
Phone: (805) 543-3850
THOMA #23-8061
REGISTERED PROFESSIONAL ENGINEER NO. 20823 ELECTRICAL STATE OF CALIFORNIA
EXPIRES: 09/30/24

Blair, Church & Flynn
CONSULTING ENGINEERS

CONSULTANT
Blair, Church & Flynn Consulting Engineers
451 Clovis Avenue, Suite 200
Clovis, California 93612
Tel (559) 326-1400
Fax (559) 326-1500

REF. & REV.

MERCED COLLEGE GREENHOUSE COMPLEX

GREENHOUSE COMPLEX

ELECTRICAL SYMBOLS LEGEND AND GENERAL NOTES

CONST. DOCUMENTS

DR. BY: AH
CH. BY: ZH
DATE: 02/13/2024
SCALE AS NOTED

E-001

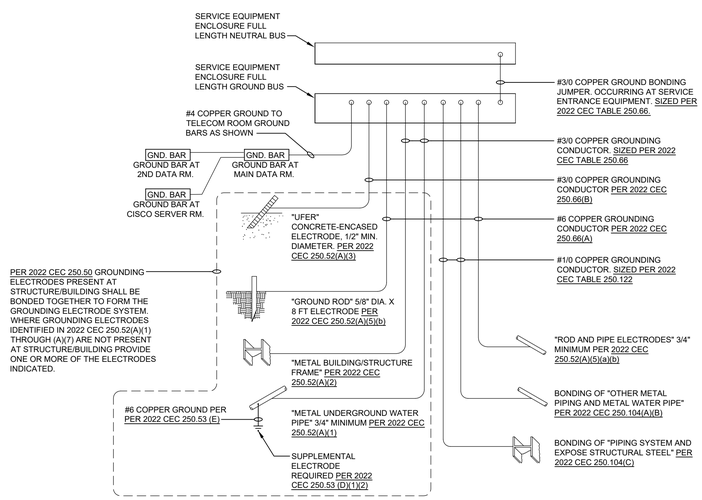

1 GROUND/BOND DETAIL

SCALE: NTS

WARNING

ARC FLASH HAZARD

LINE SIDE of MAIN	FLASH PROTECTION BOUNDARY:	40 inches
	HAZARD RISK CATEGORY:	CLASS 2
	INCIDENT ENERGY RANGE:	4 - 8 cal/cm²
LINE SIDE of MAIN	FLASH PROTECTION BOUNDARY:	20 inches
	HAZARD RISK CATEGORY:	CLASS 0
	INCIDENT ENERGY RANGE:	0 - 2 cal/cm²

PSE TQS#: #####.# Date Issued: April 2004 Study Rev. :0

LOCATION: BUS NAME PROTECTIVE DEVICE: UPSTREAM DEVICE

NOTE:
IN ACCORDANCE WITH CEC 110.16. PROVIDE ARC FLASH PROTECTION WARNING LABELS ON EACH SWITCHBOARD, PANELBOARD, AND TRANSFORMER. LABELS SHALL BE PER ANSI Z535.4 GUIDELINES PER THE ABOVE EXAMPLE.

2 TYPICAL ARC FLASH SIGNAGE DETAIL

NO SCALE

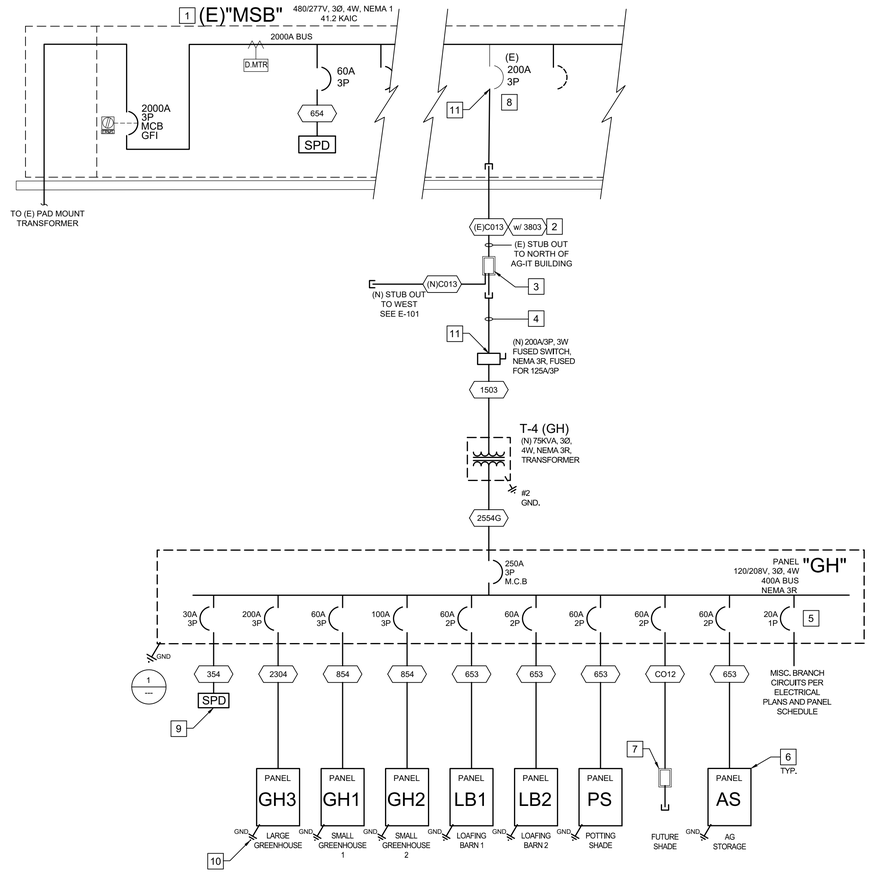

ELECTRICAL SINGLE LINE DIAGRAM

IDENTIFICATION STAMP
DIV. OF THE STATE ARCHITECT
APP: 02-121754 INC:
REVIEWED FOR
SS ☐ FLS ☐ ACS ☑
DATE: 02/21/2024

☐ REFERENCE NOTES

1. (E) MAIN SWITCHBOARD IN AG-IT BLDG. MAIN ELECTRICAL ROOM.
2. LOCATE THE (E) U/G CONDUIT AND PULL BOX INSTALLED IN AREA OF GREENHOUSE PROJECT, SEE SHEET E-101. UTILIZE THE (E) CONDUIT TO INSTALL THE SPECIFIED FEEDER CONDUCTORS BETWEEN (E) "MSB" AND "GH" DISCONNECT SWITCH.
3. (E) U/G PULL BOX WITH CONDUIT FROM 480-VOLT "MSB".
4. EXTEND NEW CONDUIT PER ELECTRICAL PLANS TO NEW DISTRIBUTION EQUIPMENT. SEE SHEET E-101.
5. REFER TO THE PANEL SCHEDULE FOR FURTHER INFORMATION.
6. PROVIDE POWER PANEL IN PROJECT BUILDINGS PER ELECTRICAL PLANS AND PANEL SCHEDULES.
7. PROVIDE PULL BOX WITH CONDUIT ONLY FOR FUTURE USE. SEE SHEET E-101.
8. UTILIZE (E) 200A SPARE CIRCUIT BREAKER IN AG-IT "MSB".
9. PROVIDE A TRANSIENT VOLTAGE SURGE PROTECTION DEVICE (SPD) WITH A MINIMUM 80KA RATING. INCORPORATE INTO PANEL "GH" OR MOUNT ADJACENT TO PANEL "GH" IN A NEMA 3R ENCLOSURE.
10. PROVIDE BUILDING SUB PANELS WITH GROUNDING ELECTRODE SYSTEM AND GROUNDING CONDUCTORS PER CEC 250 (TYP.)
11. PROVIDE OFFSET COMPRESSION LUGS TO ACCOMMODATE OVERSIZED FEEDER TO FIT THE (N) OR (E) OCPD FACTORY LUG SIZE.

COPPER FEEDER SCHEDULE

FEEDER NO.	RACEWAY QUANTITY/SIZE	CONDUCTORS
CO12	(1) 2"C	CONDUIT ONLY WITH PULL ROPE.
CO13	(1) 3"C	CONDUIT ONLY WITH PULL ROPE.
353	(1) 3/4"C	(3) #10 THWN & (1) #10 GND.
653	(1) 1"C	(3) #6 THWN & (1) #10 GND.
854	(1) 1-1/4"C	(4) #4 THWN & (1) #8 GND.
1503	(1) 3"C	(3) #1/0 THWN & (1) #6 GND.
2304	(1) 2-1/2"C	(4) #4/0 THWN & (1) #4 GND.
2554G	(1) 3"C	(4) #250 KCMIL THWN & (1) #2 GND.
3803	(1) 3"C	(3) #500 KCMIL THWN & (1) #3 GND.
4204	(1) 4"C	(4) #600 KCMIL THWN & (1) #2 GND.

EQUIPMENT ELECTRICAL B.O.D. LIST

for MERCED COLLEGE GREEN HOUSE

TE# 23-8061

TAG	DESCRIPTION	QTY	VOLTAGE	PHASE	WATTS	AMPS	HP	FLA
EF-X.X	ACME EXHAUST FAN	2	230 (208)	1			1	
IS-X.X	ACME INLET SHUTTER	14	120	1	17			
HT-X.X	MODINE GAS FIRED HEATER	4	120	1			1/4	
ECS-X.X	EVAPORATIVE COOLING SYSTEM (PUMP)	3	120	1		2.9	1/3	
F-X.X	SCHAEFNER INTERNAL FAN	8	120	1			1/10	
RV-X.X	ROOF VENT (LOCK DRIVE MOTOR)	2	120	1		2.6		
RS-X.X	ROOF SHADE SYSTEM (DRIVE MOTOR)	1	120	1		2.5	1/5	
WB-X.X	DOUBLE RAIL WATERING BOOM (CHAIN DRIVE MOTOR)	1	120	1		2.5	1/4	

(ITEMS RCVD 1-31-24)

NOTES:

- "X.X" DESIGNATION IN EQUIPMENT TAG INDICATES PANEL AND EQUIPMENT NUMBER AS REFLECTED ON ELECTRICAL FLOOR PLANS.
- ROUTE ALL GREENHOUSE EQUIPMENT BRANCH CIRCUITS THROUGH CONTACTOR PANELS AND COORINATE WITH DISTRICTS CONTROLS CONTRACTOR

SINGLE LINE DIAGRAM GENERAL NOTES

A. SERVICE ENTRANCE EQUIPMENT SHALL BE IN ACCORDANCE WITH CEC REQUIREMENTS.

B. ALL CONDUCTORS SHALL BE COPPER WITH TYPE [THHN/THWN] INSULATION UNLESS OTHERWISE NOTED.

C. ALL SWITCHES, CIRCUIT BREAKERS AND OTHER EQUIPMENT, AS SPECIFIED, SHALL HAVE TERMINATION PROVISIONS LISTED AND IDENTIFIED FOR USE WITH 75 DEG. CONDUCTORS, AND ALL FEEDER CONDUCTORS, AND CONDUITS, ARE SIZE BASED ON USE OF 75 DEG. C COPPER WIRES TYPE THWN/THHN.

D. ALL EQUIPMENT SHALL HAVE AN APPROVED TESTING LABORATORY LABEL ATTACHED [UL, CSA, ETC.] (CEC 110-2).

E. SERVICE ENTRANCE AND DOWNSTREAM EQUIPMENT SHALL HAVE A U.L APPROVED SERIES RATING EQUAL TO OR GREATER THAN THE AVAILABLE FAULT CURRENT. LABEL EQUIPMENT ACCORDINGLY WHEN SERIES RATINGS APPLY. IF NO SERIES RATING IS AVAILABLE, EQUIPMENT SHALL BE FULLY-RATED FOR THE AVAILABLE FAULT CURRENT.

F. THE ELECTRICAL CONTRACTOR IS RESPONSIBLE FOR SUPPLYING GEAR SIZED TO FIT IN THE AVAILABLE SPACE IN THE ELECTRIC ROOM/EQUIPMENT PAD. THE DIMENSIONS SHOWN ARE BASED UPON EATON / SQUARE D EQUIPMENT. REFER TO ARCHITECTURAL PLANS FOR DIMENSIONAL INFORMATION NOT SHOWN ON THE ELECTRICAL PLANS. CONTRACTOR SHALL SUBMIT A 1/4" SCALE DRAWING OF ALL SWITCHGEAR, AND TERMINATION CABINETS ON FLOOR PLAN WITH SUBMITTAL.

G. SINGLE LINE DIAGRAM IS A GRAPHIC REPRESENTATION OF THE POWER DISTRIBUTION, REFER TO ELECTRICAL FLOOR PLANS FOR EQUIPMENT ORIENTATION / LAYOUT.

thoma ENGINEERING
THOMA ELECTRIC, INC.
P.O. Box 1167 - 3562 Empleo St.
San Luis Obispo, CA 93406
Phone: (805) 543-3850
THOMA #23-8061
REGISTERED PROFESSIONAL ENGINEER — ZAHI A. HAKIM — NO. 20823 — ELECTRICAL — STATE OF CALIFORNIA
EXPIRES: 09/30/24
Blair, Church & Flynn CONSULTING ENGINEERS
CONSULTANT
Blair, Church & Flynn Consulting Engineers
451 Clovis Avenue, Suite 200
Clovis, California 93612
Tel (559) 326-1400
Fax (559) 326-1500

REF. & REV.

MERCED COLLEGE GREENHOUSE COMPLEX

GREENHOUSE COMPLEX

ELECTRICAL SINGLE LINE DIAGRAM

CONST. DOCUMENTS

DR. BY: AH.
CH. BY: ZH
DATE: 02/13/2024
SCALE AS NOTED

E-002

Feb 12, 2024 - 4:40pm - asackett - K:\ENG\2023\23-8061\23-8061_E002_SLD.dwg

Drawing K:\ENG\2023\23-8061\23-8061_E002_SLD.dwg, E-002 - 8CF.ctb
Plot by asackett Feb 12, 2024 4:40pm

IDENTIFICATION STAMP
DIV. OF THE STATE ARCHITECT
APP: 02-121754 INC:
REVIEWED FOR
SS ☐ FLS ☐ ACS ☑
DATE: 02/21/2024

(N) PANEL GH

BUS RATING: 400A 120/208V, 3PH, 4W
MAIN: 250A /3P MAIN CIRCUIT BREAKER
SPACES: 42 FULL SIZE BOLT-ON CB SPACES
AIC RATING: 22 KAIC PANEL

SURFACE MOUNT, NEMA 3R
LOCATION: GREENHOUSE COMPLEX
WITH EQUIPMENT GND BUS
FED FROM A G-IT BLDG. 'MSB'

CKT %VD	DIST (FT)	NOTES	LOAD TYPE	CKT	DESCRIPTION	TRIP	POLES	COND SIZE	PHASE A	PHASE B	PHASE C	COND SIZE	POLES	TRIP	DESCRIPTION	CKT	LOAD TYPE	NOTES	DIST (FT)	CKT %VD
			N	1	SPD	30	3	10	4036			4/0	3	200	PANEL GH3, LRG. GRNHSE.	2	N		190	0.32%
			N	3	"	-	-	10		4417		4/0	-	-	"	4	N		190	0.35%
			N	5	"	-	-	10			4132	4/0	-	-	"	6	N		190	0.33%
0.28%	155		N	7	PANEL GH1, SM. GRNHSE.	60	3	4	856 2261			6	2	60	PANEL AS, AG STORAGE	8	N		25	0.22%
0.51%	155		N	9	"	-	-	4		1533 2410		6	-	-	"	10	N		25	0.24%
0.43%	155		N	11	"	-	-	4			1292 758	6	2	60	PANEL PS, POTTING SHADE	12	N		35	0.10%
0.35%	190		N	13	PANEL GH2, SM. GRNHSE.	60	3	4	856 1013			6	-	-	"	14	N		35	0.14%
0.62%	190		N	15	"	-	-	4		1533 3340		6	2	60	PANEL LB1, LOAFING BARN 1	16	N		115	1.51%
0.52%	190		N	17	"	-	-	4			1292 4800	6	-	-	"	18	N		115	2.17%
0.20%	40		N	19	LV CABINET RECEPTACLE	20	1	12	180 4838			6	2	60	PANEL LB2, LOAFING BARN 2	20	N		165	3.14%
0.20%	40		R	21	LV CABINET RECEPTACLE	20	1	12		180 3303		6	-	-	"	22	N		165	2.14%
0.79%	40		M	23	LV CABINET AC UNIT	20	1	12			720 1040	12	2	20	SOIL MIXER RECEPTACLE	24	M		85	1.40%
				25	SPACE				1040			12	-	-	"	26	M		85	1.40%
				27	SPACE								2	60	SPARE C.B. FOR (F) SHADE STRUCTURE	28				
				29	SPACE								-	-	"	30				
				31	SPACE										SPACE	32				
				33	SPACE										SPACE	34				
				35	SPACE										SPACE	36				
				37	SPACE										SPACE	38				
				39	SPACE										SPACE	40				
				41	SPACE										SPACE	42				

	PHASE A	PHASE B	PHASE C
CON:	15078	16716	14034
25%:	0	0	0
SUB:	0	0	0
TOT:	15078	16716	14034
AMPS	126	139	117

PANEL NOTES:
1. ...

LOAD (VA)		LOAD TYPE LEGEND
180	R	RECEPTACLE
0	L	LIGHTING (125% OF CONNECTED LOAD CEC 215.2)
2800	M	MECHANICAL
0	K	KITCHEN APPLIANCE
42846.75	N	NON-CONTINUOUS MISC.
0	C	CONTINUOUS MISC. (125% OF CONNECTED LOAD CEC 215.2)

(E) Switchboard MSB Panel Schedule

BUS RATING: 2000A, 277/480V, 3PH, 4W
NEMA 1
AIC RATING: 42K

2000A/3P GFCI MCB
ELECTRICAL RM. 127
FED FROM 12KV CIRC.#5 VIA PADMOUNT

DIST (FT)	PANEL/LOAD	TRIP	POLES	COND SIZE	PHASE A	PHASE B	PHASE C	CALC TYPE
	DISTRIBUTION				CONNECTED VA (AMPS) %VD			
	(E) SPD	60	3	6	0	0	0	
40	(E) PANEL "HA 1"	225	3	4/0	50600 (182.7A) 0.16%	48335 (174.5A) 0.15%	50725 (183.1A) 0.16%	CON
160	(E) PANEL "HB1"	200	3	3/0	18817.90 (67.9A) 0.30%	14844.65 (53.6A) 0.24%	15974 (57.7A) 0.25%	CON
50	(E) TRANSFORMER "T-1" / PANEL "LDP"	225	3	4/0	43209.60 (156.0A) 0.17%	41004.00 (148.0A) 0.16%	43354.40 (156.5A) 0.17%	CON
275	(E) PANEL "HC1"	800	3	2-500	207170.00 (747.9A) 0.96%	210222 (758.9A) 0.97%	210205 (758.9A) 0.97%	CON
160	(E) PANEL "HC2"	400	3	600	112960 (407.8A) 0.50%	112960 (407.8A) 0.50%	112960 (407.8A) 0.50%	CON
160	(E) PANEL "HD1"	400	3	600	64294 (232.1A) 0.29%	64294 (232.1A) 0.29%	64294 (232.1A) 0.29%	CON
70	(E) BOOSTER PUMP BP-1	30	3	10	3879.87 (14.0A) 0.44%	3879.87 (14.0A) 0.44%	3879.87 (14.0A) 0.44%	CON
445	(N) TRANSFORMER "T-4" / PANEL "GH"	200	3	500	15078 (54.4A) 0.06%	16716 (60.3A) 0.06%	14034 (50.7A) 0.05%	CON
	(E) SPARE	30	3		0.00	0.00	0.00	
	(E) SPARE	100	3		0.00	0.00	0.00	
	SPACE		3		0	0	0	
	SPACE		3		0	0	0	
	SPACE		3		0	0	0	
	SPACE		3		0	0	0	
	SPACE		3		0	0	0	
	SPACE		3		0	0	0	
				KVA (AMPS):	516.01 (1862.8A)	512.25 (1849.3A)	515.42 (1860.7A)	

Total KVA 1543.69
Total Amps 1857

V.D CALCULATION TYPE
CON CONNECTED LOAD
CB 80% OF BREAKER RATING

(N) PANEL GH2

BUS RATING: 100A 120/208V, 3PH, 4W
MAIN: 60A /3P MAIN CIRCUIT BREAKER
SPACES: 30 FULL SIZE BOLT-ON CB SPACES
AIC RATING: 10 KAIC PANEL

SURFACE MOUNT, NEMA 3R
LOCATION: SMALL GREEN HOUSE 2
WITH EQUIPMENT GND BUS
FED FROM PANEL 'GH'

CKT %VD	DIST (FT)	NOTES	LOAD TYPE	CKT	DESCRIPTION	TRIP	POLES	COND SIZE	PHASE A	PHASE B	PHASE C	COND SIZE	POLES	TRIP	DESCRIPTION	CKT	LOAD TYPE	NOTES	DIST (FT)	CKT %VD
0.12%	25		R	1	WEST RECEPTACLE	20	1	12	180 30			12	1	20	EXT. LIGHTING	2	L		72	0.06%
0.21%	43		R	3	WEST RECEPTACLE	20	1	12		180 660		12	1	20	INT. LIGHTING	4	L		104	1.89%
0.30%	60		R	5	WEST RECEPTACLE	20	1	12			180 180	12	1	20	EAST RECEPTACLE	6	R		14	0.07%
0.43%	65		M	7	"F-1.1", "F-1.2"	15	1	14	150 180			12	1	20	EAST RECEPTACLE	8	R		32	0.16%
0.38%	25		M	9	"HT-1.1"	15	1	14		348 180		12	1	20	EAST RECEPTACLE	10	R		50	0.25%
0.14%	10		R	11	COMMUNICATION CABINET	20	1	12			500 432	14	1	15	"ECS-2.1"	12	M		70	1.32%
0.07%	10		M	13	GH CONTACTOR PANEL	20	1	12	240 68			14	1	15	"IS-2.1", "IS-2.2", "IS-2.3", "IS-2.4"	14	M		80	0.24%
				15	SPACE										SPACE	16				
				17	SPACE										SPACE	18				
				19	SPACE										SPACE	20				
				21	SPACE										SPACE	22				
				23	SPACE										SPACE	24				
				25	SPACE										SPACE	26				
				27	SPACE										SPACE	28				
				29	SPACE										SPACE	30				

	PHASE A	PHASE B	PHASE C
CON:	848	1368	1292
25%:	8	165	0
SUB:	0	0	0
TOT:	856	1533	1292
AMPS	7	13	11

PANEL NOTES:

LOAD (VA)		LOAD TYPE LEGEND
1580	R	RECEPTACLE
690	L	LIGHTING (125% OF CONNECTED LOAD CEC 215.2)
1238	M	MECHANICAL
0	K	KITCHEN APPLIANCE
0	N	NON-CONTINUOUS MISC.
0	C	CONTINUOUS MISC. (125% OF CONNECTED LOAD CEC 215.2)

(N) PANEL GH1

BUS RATING: 100A 120/208V, 3PH, 4W
MAIN: 60A /3P MAIN CIRCUIT BREAKER
SPACES: 30 FULL SIZE BOLT-ON CB SPACES
AIC RATING: 10 KAIC PANEL

SURFACE MOUNT, NEMA 3R
LOCATION: SMALL GREEN HOUSE 1
WITH EQUIPMENT GND BUS
FED FROM PANEL 'GH'

CKT %VD	DIST (FT)	NOTES	LOAD TYPE	CKT	DESCRIPTION	TRIP	POLES	COND SIZE	PHASE A	PHASE B	PHASE C	COND SIZE	POLES	TRIP	DESCRIPTION	CKT	LOAD TYPE	NOTES	DIST (FT)	CKT %VD
0.12%	25		R	1	WEST RECEPTACLE	20	1	12	180 30			12	1	20	EXT. LIGHTING	2	L		72	0.06%
0.21%	43		R	3	WEST RECEPTACLE	20	1	12		180 660		12	1	20	INT. LIGHTING	4	L		104	1.89%
0.30%	60		R	5	WEST RECEPTACLE	20	1	12			180 180	12	1	20	EAST RECEPTACLE	6	R		14	0.07%
0.43%	65		M	7	"F-1.1", "F-1.2"	15	1	14	150 180			12	1	20	EAST RECEPTACLE	8	R		32	0.16%
0.38%	25		M	9	"HT-1.1"	15	1	14		348 180		12	1	20	EAST RECEPTACLE	10	R		50	0.25%
0.14%	10		R	11	COMMUNICATION CABINET	20	1	12			500 432	14	1	15	"ECS-1.1"	12	M		70	1.32%
0.07%	10		M	13	GH CONTACTOR PANEL	20	1	12	240 68			14	1	15	"IS-1.1", "IS-1.2", "IS-1.3", "IS-1.4"	14	M		80	0.24%
				15	SPACE										SPACE	16				
				17	SPACE										SPACE	18				
				19	SPACE										SPACE	20				
				21	SPACE										SPACE	22				
				23	SPACE										SPACE	24				
				25	SPACE										SPACE	26				
				27	SPACE										SPACE	28				
				29	SPACE										SPACE	30				

	PHASE A	PHASE B	PHASE C
CON:	848	1368	1292
25%:	8	165	0
SUB:	0	0	0
TOT:	856	1533	1292
AMPS	7	13	11

PANEL NOTES:

LOAD (VA)		LOAD TYPE LEGEND
1580	R	RECEPTACLE
690	L	LIGHTING (125% OF CONNECTED LOAD CEC 215.2)
1238	M	MECHANICAL
0	K	KITCHEN APPLIANCE
0	N	NON-CONTINUOUS MISC.
0	C	CONTINUOUS MISC. (125% OF CONNECTED LOAD CEC 215.2)

thoma ENGINEERING
THOMA ELECTRIC, INC.
P.O. Box 1167 - 3562 Empleo St.
San Luis Obispo, CA 93406
Phone: (805) 543-3850
THOMA #23-8061

REGISTERED PROFESSIONAL ENGINEER
ZAHI M. THOMA
NO. 20823
ELECTRICAL
STATE OF CALIFORNIA
EXPIRES: 09/30/24

Blair, Church & Flynn
CONSULTING ENGINEERS

CONSULTANT
Blair, Church & Flynn Consulting Engineers
4551 Clovis Avenue, Suite 200
Clovis, California 93612
Tel (559) 326-1400
Fax (559) 326-1500

REF. & REV.

MERCED COLLEGE GREENHOUSE COMPLEX
GREENHOUSE COMPLEX
PANEL SCHEDULES

CONST. DOCUMENTS
DR. BY: AH
CH. BY: ZH
DATE: 02/13/2024
SCALE AS NOTED
E-003

IDENTIFICATION STAMP
DIV. OF THE STATE ARCHITECT
APP: 02-121754 INC:
REVIEWED FOR
SS ☐ FLS ☐ ACS ☑
DATE: 02/21/2024

(N) PANEL AS

BUS RATING: 100A 120/208V, 1PH, 3W
MAIN: 60A /2P MAIN CIRCUIT BREAKER
SPACES: 30 FULL SIZE BOLT-ON CB SPACES
AIC RATING: 10 KAIC PANEL

SURFACE MOUNT, NEMA 1
LOCATION: AG STORGAE BLDG.
WITH EQUIPMENT GND BUS
FED FROM PANEL 'GH'

CKT %VD	DIST (FT)	NOTES	LOAD TYPE	CKT	DESCRIPTION	TRIP	POLES	COND SIZE	PHASE A (CONNECTED VA)	PHASE B (CONNECTED VA)	COND SIZE	POLES	TRIP	DESCRIPTION	CKT	LOAD TYPE	NOTES	DIST (FT)	CKT %VD
0.59%	40		R	1	EAST RECEPTACLES	20	1	12	540	45	12	1	20	EXT. LIGHTING	2	L		32	0.04%
0.97%	65		R	3	EAST RECEPTACLES	20	1	12		540	12	1	20	INT. LIGHTING	4	L		58	0.67%
0.69%	50		L	5	EAST AG CONTAINER LIGHTS	20	1	12	500	420	12	1	20	WEST RECEPTACLES	6	R		20	0.30%
0.96%	70		L	7	WEST AG CONTAINER LIGHTS	20	1	12		500	12	1	20	WEST RECEPTACLES	8	R		45	0.89%
0.14%	10		R	9	COMMUNICATION CABINET	20	1	12	500	720				SPACE	10				
				11	SPACE									SPACE	12				
				13	SPACE									SPACE	14				
				15	SPACE									SPACE	16				
				17	SPACE									SPACE	18				
				19	SPACE									SPACE	20				
				21	SPACE									SPACE	22				
				23	SPACE									SPACE	24				
				25	SPACE									SPACE	26				
				27	SPACE									SPACE	28				
				29	SPACE									SPACE	30				

PANEL NOTES:

	PHASE A	PHASE B
CON:	2125	2180
25%:	136	230
SUB:	0	0
TOT:	2261	2410
AMPS	19	20

LOAD (VA)	LOAD TYPE LEGEND	
2840	R	RECEPTACLE
1465	L	LIGHTING (125% OF CONNECTED LOAD CEC 215.2)
0	M	MECHANICAL
0	K	KITCHEN APPLIANCE
0	N	NON-CONTINUOUS MISC.
0	C	CONTINUOUS MISC. (125% OF CONNECTED LOAD CEC 215.2)

(N) PANEL GH3

BUS RATING: 225A 120/208V, 3PH, 4W
MAIN: 200A /3P MAIN CIRCUIT BREAKER
SPACES: 42 FULL SIZE BOLT-ON CB SPACES
AIC RATING: 10 KAIC PANEL

SURFACE MOUNT, NEMA 3R
LOCATION: LARGE GREEN HOUSE
WITH EQUIPMENT GND BUS
FED FROM PANEL 'GH'

CKT %VD	DIST (FT)	NOTES	LOAD TYPE	CKT	DESCRIPTION	TRIP	POLES	COND SIZE	PHASE A (CONNECTED VA)	PHASE B (CONNECTED VA)	PHASE C (CONNECTED VA)	COND SIZE	POLES	TRIP	DESCRIPTION	CKT	LOAD TYPE	NOTES	DIST (FT)	CKT %VD
0.26%	26		R	1	EAST RECEPTACLES	20	1	12	360	198		12	1	20	EXT. LIGHTING	2	L		72	0.39%
0.61%	62		R	3	EAST RECEPTACLES	20	1	12		360		10	1	20	NORHT INT. LIGHTING	4	L		170	2.40%
0.43%	86		R	5	EAST RECEPTACLES	20	1	12		820	180	12	1	20	SOUTH INT. LIGHTING	6	L		95	2.19%
1.23%	124		R	7	EAST RECEPTACLES	20	1	12	360	360	840	12	1	20	WEST RECEPTACLES	8	R		8	0.08%
1.58%	160		R	9	EAST RECEPTACLES	20	1	12		360		12	1	20	WEST RECEPTACLES	10	R		52	0.51%
0.42%	35		M	11	"EF-2"	15	2	14			480	12	1	20	WEST RECEPTACLES	12	R		88	0.44%
0.42%	35		M	13	"	15	-	14	480	360	180	12	1	20	WEST RECEPTACLES	14	R		112	1.11%
0.68%	45		M	15	"HT-3.1"	15	1	14		348		12	1	20	WEST RECEPTACLES	16	R		154	0.76%
2.43%	160		M	17	"HT-3.2"	15	1	14		180	348	14	2	15	"EF-1"	18	M		15	0.18%
1.96%	150		M	19	"F-3.1", "F-3.2", "F-3.3", "F-3.4"	15	1	14	300	480	480	14	-	15	"	20	M		15	0.18%
1.43%	105		M	21	"RV-3.2"	15	1	14		312		14	1	15	"RS-3.1"	22	M		12	0.16%
0.41%	30		R	23	COMMUNICATION CABINET	20	1	12		300	500	14	1	15	"RV-3.1"	24	M		95	1.29%
0.20%	30		M	25	GH CONTROL PANEL	20	1	12	240	348	312	14	1	15	"WB-3.1"	26	M		105	1.59%
0.20%	30		M	27	GH CONTACTOR PANEL	20	1	12		240		12	1	15	"ECS-3.1"	28	M		155	1.84%
0.41%	30		M	29	ROOF SHADE CONTROL PANEL	20	1	12		432	500	14	1	15	"IS-3.1", "IS-3.2", "IS-3.3", "IS-3.4", "IS-3.5", "IS-3.6"	30	M		170	0.76%
0.41%	30		M	31	ROOF VENT CP 1	20	1	12	500		102				SPACE	32				
0.41%	30		M	33	ROOF VENT CP 2	20	1	12		500					SPACE	34				
				35	SPACE										SPACE	36				
				37	SPACE										SPACE	38				
				39	SPACE										SPACE	40				
				41	SPACE										SPACE	42				

PANEL NOTES:

	PHASE A	PHASE B	PHASE C
CON:	3986	4212	3922
25%:	50	205	210
SUB:	0	0	0
TOT:	4036	4417	4132
AMPS	34	37	34

LOAD (VA)	LOAD TYPE LEGEND	
3560	R	RECEPTACLE
1858	L	LIGHTING (125% OF CONNECTED LOAD CEC 215.2)
6702	M	MECHANICAL
0	K	KITCHEN APPLIANCE
0	N	NON-CONTINUOUS MISC.
0	C	CONTINUOUS MISC. (125% OF CONNECTED LOAD CEC 215.2)

(N) PANEL LB2

BUS RATING: 100A 120/208V, 1PH, 3W
MAIN: 60A /2P MAIN CIRCUIT BREAKER
SPACES: 18 FULL SIZE BOLT-ON CB SPACES
AIC RATING: 10 KAIC PANEL

SURFACE MOUNT, NEMA 1
LOCATION: LOAFING BARN 2
WITH EQUIPMENT GND BUS
FED FROM PANEL 'GH'

CKT %VD	DIST (FT)	NOTES	LOAD TYPE	CKT	DESCRIPTION	TRIP	POLES	COND SIZE	PHASE A (CONNECTED VA)	PHASE B (CONNECTED VA)	COND SIZE	POLES	TRIP	DESCRIPTION	CKT	LOAD TYPE	NOTES	DIST (FT)	CKT %VD
				1	SPACE				30		12	1	20	EXT. LIGHTING	2	L		56	0.05%
				3	SPACE					290	12	1	20	INT. LIGHTING	4	L		42	0.33%
				5	SPACE				1920		12	1	20	20A CART CHARGER	6	C		28	1.48%
				7	SPACE					1920	12	1	20	20A CART CHARGER	8	C		40	2.11%
				9	SPACE				1920		12	1	20	20A CART CHARGER	10	C		50	2.64%
				11	SPACE					540	12	1	20	RECEPTACLES	12	R		52	0.77%
				13	SPACE									SPACE	14				
				15	SPACE									SPACE	16				
				17	SPACE									SPACE	18				

PANEL NOTES:

	PHASE A	PHASE B
CON:	3870	2750
25%:	968	553
SUB:	0	0
TOT:	4838	3303
AMPS	40	28

LOAD (VA)	LOAD TYPE LEGEND	
540	R	RECEPTACLE
320	L	LIGHTING (125% OF CONNECTED LOAD CEC 215.2)
0	M	MECHANICAL
0	K	KITCHEN APPLIANCE
0	N	NON-CONTINUOUS MISC.
5760	C	CONTINUOUS MISC. (125% OF CONNECTED LOAD CEC 215.2)

(N) PANEL LB1

BUS RATING: 100A 120/208V, 1PH, 3W
MAIN: 60A /2P MAIN CIRCUIT BREAKER
SPACES: 18 FULL SIZE BOLT-ON CB SPACES
AIC RATING: 10 KAIC PANEL

SURFACE MOUNT, NEMA 1
LOCATION: LOAFTING BARN 1
WITH EQUIPMENT GND BUS
FED FROM PANEL 'GH'

CKT %VD	DIST (FT)	NOTES	LOAD TYPE	CKT	DESCRIPTION	TRIP	POLES	COND SIZE	PHASE A (CONNECTED VA)	PHASE B (CONNECTED VA)	COND SIZE	POLES	TRIP	DESCRIPTION	CKT	LOAD TYPE	NOTES	DIST (FT)	CKT %VD
0.45%	56		L	1	INT. LIGHTING	20	1	12	290	30	12	1	20	EXT. LIGHTING	2	L		56	0.05%
				3	SPACE					1920	12	1	20	20A CART CHARGER	4	C		28	1.48%
				5	SPACE				1920		12	1	20	20A CART CHARGER	6	C		40	2.11%
				7	SPACE					1920	12	1	20	20A CART CHARGER	8	C		50	2.64%
				9	SPACE				540		12	1	20	RECEPTACLES	10	R		52	0.77%
				11	SPACE									SPACE	12				
				13	SPACE									SPACE	14				
				15	SPACE									SPACE	16				
				17	SPACE									SPACE	18				

PANEL NOTES:

	PHASE A	PHASE B
CON:	2780	3840
25%:	560	960
SUB:	0	0
TOT:	3340	4800
AMPS	28	40

LOAD (VA)	LOAD TYPE LEGEND	
540	R	RECEPTACLE
320	L	LIGHTING (125% OF CONNECTED LOAD CEC 215.2)
0	M	MECHANICAL
0	K	KITCHEN APPLIANCE
0	N	NON-CONTINUOUS MISC.
5760	C	CONTINUOUS MISC. (125% OF CONNECTED LOAD CEC 215.2)

(N) PANEL PS

BUS RATING: 100A 120/208V, 1PH, 3W
MAIN: 60A /2P MAIN CIRCUIT BREAKER
SPACES: 12 FULL SIZE BOLT-ON CB SPACES
AIC RATING: 10 KAIC PANEL

SURFACE MOUNT, NEMA 3R
LOCATION: POTTING SHADE
WITH EQUIPMENT GND BUS
FED FROM PANEL 'GH'

CKT %VD	DIST (FT)	NOTES	LOAD TYPE	CKT	DESCRIPTION	TRIP	POLES	COND SIZE	PHASE A (CONNECTED VA)	PHASE B (CONNECTED VA)	COND SIZE	POLES	TRIP	DESCRIPTION	CKT	LOAD TYPE	NOTES	DIST (FT)	CKT %VD
1.19%	60			1	RECEPTACLES	20	1	12	720	30	12	1	20	EXT. LIGHTING	2	L		75	0.06%
				3	SPACE					810	12	1	20	INT. LIGHTING	4	L		80	1.78%
				5	SPACE									SPACE	6				
				7	SPACE									SPACE	8				
				9	SPACE									SPACE	10				
				11	SPACE									SPACE	12				

PANEL NOTES:

	PHASE A	PHASE B
CON:	750	810
25%:	8	203
SUB:	0	0
TOT:	758	1013
AMPS	6	8

LOAD (VA)	LOAD TYPE LEGEND	
0	R	RECEPTACLE
840	L	LIGHTING (125% OF CONNECTED LOAD CEC 215.2)
0	M	MECHANICAL
0	K	KITCHEN APPLIANCE
0	N	NON-CONTINUOUS MISC.
0	C	CONTINUOUS MISC. (125% OF CONNECTED LOAD CEC 215.2)

thoma ENGINEERING
THOMA ELECTRIC, INC.
P.O. Box 1167 - 3562 Empleo St.
San Luis Obispo, CA 93406
Phone: (805) 543-3850
THOMA #23-8061

REGISTERED PROFESSIONAL ENGINEER
ZAC FISBEN
NO. 20823
ELECTRICAL
STATE OF CALIFORNIA
EXPIRES: 09/30/24

Blair, Church & Flynn
CONSULTING ENGINEERS

CONSULTANT
Blair, Church & Flynn Consulting Engineers
4551 Clovis Avenue, Suite 200
Clovis, California 93612
Tel (559) 326-1400
Fax (559) 326-1500

REF. & REV.

MERCED COLLEGE GREENHOUSE COMPLEX

GREENHOUSE COMPLEX
PANEL SCHEDULES

CONST. DOCUMENTS
DR. BY: AH
CH. BY: ZH
DATE: 02/13/2024
SCALE AS NOTED
E-004

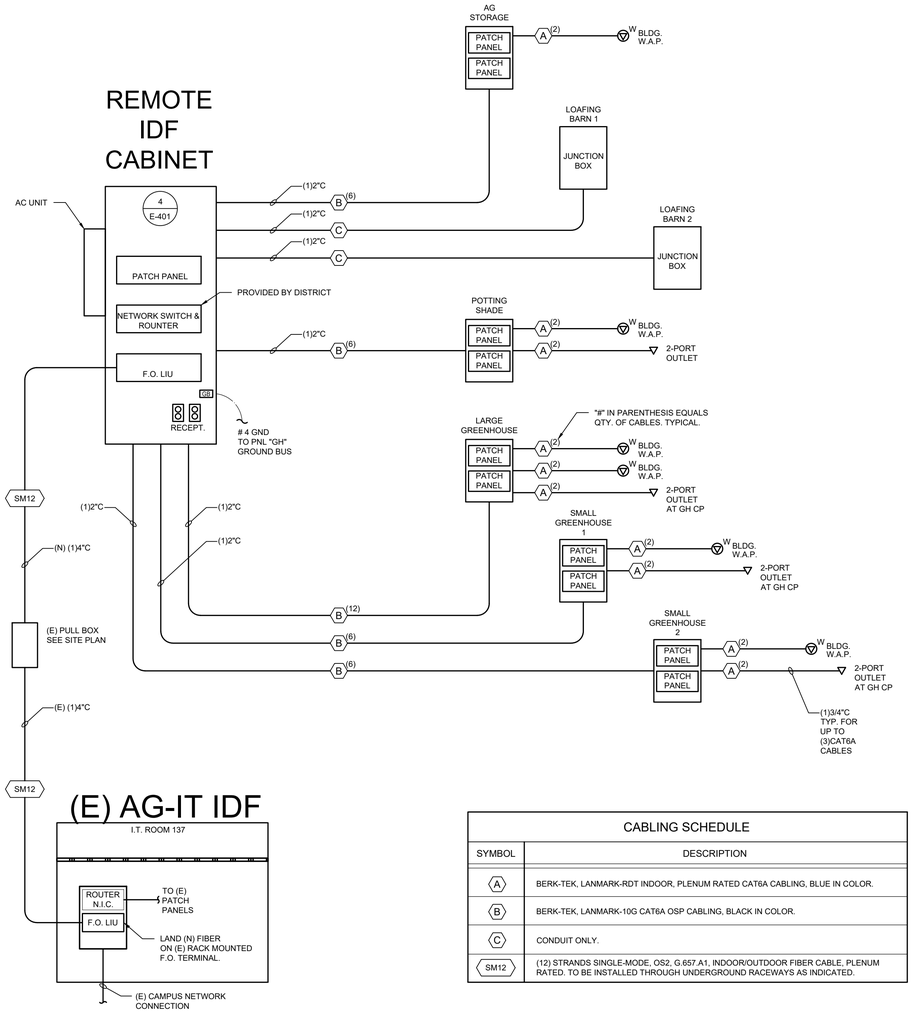

CABLING SCHEDULE	
SYMBOL	DESCRIPTION
A	BERK-TEK, LANMARK-RDT INDOOR, PLENUM RATED CAT6A CABLING, BLUE IN COLOR.
B	BERK-TEK, LANMARK-10G CAT6A OSP CABLING, BLACK IN COLOR.
C	CONDUIT ONLY.
SM12	(12) STRANDS SINGLE-MODE, OS2, G.657.A1, INDOOR/OUTDOOR FIBER CABLE, PLENUM RATED. TO BE INSTALLED THROUGH UNDERGROUND RACEWAYS AS INDICATED.

BASIS OF DESIGN

CABLING SPEC.

MANUF.	MANUFACTURER'S PART NO. / SERIES NO.	DESCRIPTION
LEVITON	012ZWP-T4101D20	INDOOR/OUTDOOR, PLENUM RATED, LOOSE TUBE 'OS2', G657.A1 COMPLIANT 12-STRAND, SINGLE MODE FIBER OPTIC CABLE
BERK-TEK	LANMARK-RDT	INDOOR, PLENUM RATED, CAT6A CABLE
BERK-TEK	LANMARK-10G CAT6A OSP	OUTDOOR, CAT6A CABLE (PERMITTED IN UNDERSLAB APPLICATIONS ONLY)

REMOTE INTERMEDIATE DISTRIBUTION FRAME ('IDF') CABINET

MANUF.	MANUFACTURER'S PART NO. / SERIES NO.	DESCRIPTION
HUBBLE	IR4216APG (W/ IRAC3 & IRF1812)	REMOTE NEMA 3R EQUIPMENT CABINET WITH AIR CONDITIONER AND 18" FLOOR STAND KIT
LEVITON	OPT-X 2000i (5R1UH-S03)	1RU, RACK-MOUNTED, FIBER OPTIC SPLICE ENCLOSURE
LEVITON	49255-Q48	48 PORT, 1RU MODULAR PATCH PANEL (CAT6A) - COMPATIBLE WITH LEVITON QUICKPORT CONNECTORS

NOTE: FOR PURPOSES OF EQUIPMENT SIZE AND FIT, THIS DESIGN IS BASED UPON THE EQUIPMENT SHOWN IN THIS SCHEDULE. ELECTRICAL CONTRACTOR SHALL BE RESPONSIBLE FOR FORM, FIT AND FUNCTION OF EQUIPMENT SUBSTITUTED AT BID TIME. ALL TELECOMMUNICATIONS EQUIPMENT NOT LISTED HERE SHALL BE SUBMITTED FOR APPROVAL PER SPECIFICATIONS.

1 TELECOM RISER DIAGRAM

SCALE: NTS

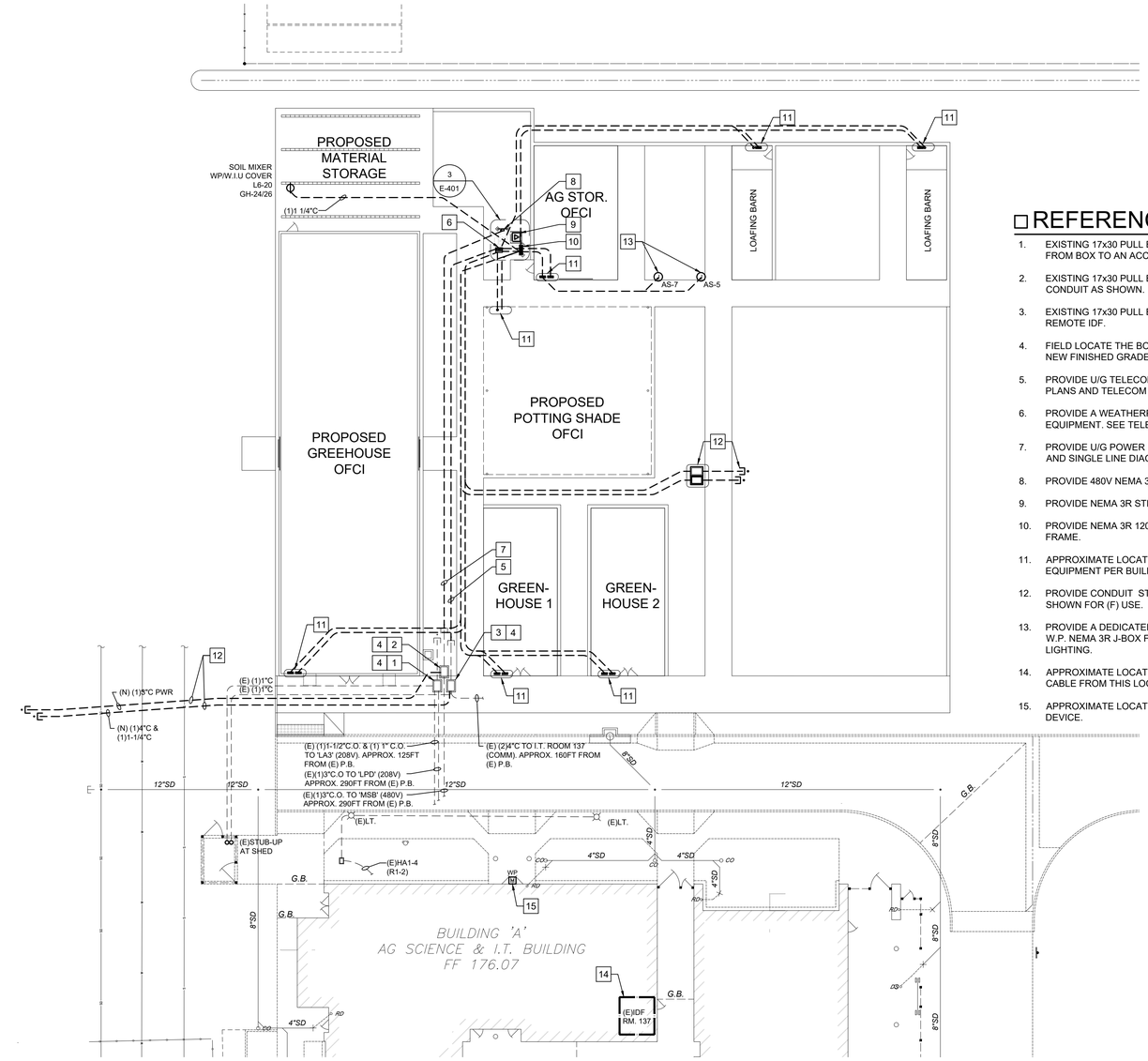

ELECTRICAL SITE PLAN

SCALE: 1" - 20' 0"

NORTH

IDENTIFICATION STAMP
DIV. OF THE STATE ARCHITECT
APP: 02-121754 INC:
REVIEWED FOR
SS ☐ FLS ☐ ACS ☑
DATE: 02/21/2024

REFERENCE NOTES

1. EXISTING 17x30 PULL BOX LABELED "208V ELECTRICAL". STUB A 2"C FROM BOX TO AN ACCESSIBLE LOCATION TO THE NORTH FOR (F) USE.
2. EXISTING 17x30 PULL BOX LABELED "480V ELECTRICAL". EXTEND CONDUIT AS SHOWN.
3. EXISTING 17x30 PULL BOX LABELED "COMM". EXTEND CONDUIT TO (N) REMOTE IDF.
4. FIELD LOCATE THE BOXES AND ADJUST COVERS TO BE FLUSH WITH NEW FINISHED GRADE.
5. PROVIDE U/G TELECOM DISTRIBUTION CONDUIT(S) PER BUILDING PLANS AND TELECOM RISER DIAGRAM (TYP).
6. PROVIDE A WEATHERPROOF CABINET TO HOUSE LOW VOLTAGE EQUIPMENT. SEE TELECOM RISER DIAGRAM.
7. PROVIDE U/G POWER DISTRIBUTION CONDUIT(S) PER BUILDING PLANS AND SINGLE LINE DIAGRAM (TYP.).
8. PROVIDE 480V NEMA 3R DISCONNECT SWITCH.
9. PROVIDE NEMA 3R STEP-DOWN TRANSFORMER ON CONCRETE PAD.
10. PROVIDE NEMA 3R 120/208V POWER PANEL "GH" ON STEEL SUPPORT FRAME.
11. APPROXIMATE LOCATION OF BUILDING POWER & LOW VOLTAGE EQUIPMENT PER BUILDING PLANS AND RISER DIAGRAM.
12. PROVIDE CONDUIT STUB-OUTS FROM POWER AND COMM. BOXES AS SHOWN FOR (F) USE.
13. PROVIDE A DEDICATED CIRCUIT, 20A DISCONNECT SWITCH (SPST), AND W.P. NEMA 3R J-BOX FOR EACH AG CONTAINER TO CONNECT INTERIOR LIGHTING.
14. APPROXIMATE LOCATION OF AG-IT IDF ROOM. EXTEND FIBER OPTIC CABLE FROM THIS LOCATION TO (N) REMOTE IDF.
15. APPROXIMATE LOCATION OF NEAREST FIRE ALARM NOTIFICATION DEVICE.

811 Know what's below. Call before you dig.

thoma ENGINEERING
THOMA ELECTRIC, INC.
P.O. Box 1167 - 3562 Empleo St.
San Luis Obispo, CA 93406
Phone: (805) 543-3850
THOMA #23-8061
Registered Professional Engineer
Tel Eby M. Zhu
NO. 20823
ELECTRICAL
STATE OF CALIFORNIA
EXPIRES: 09/30/24

Blair, Church & Flynn
CONSULTING ENGINEERS

CONSULTANT
Blair, Church & Flynn Consulting Engineers
451 Clovis Avenue, Suite 200
Clovis, California 93612
Tel (559) 326-1400
Fax (559) 326-1500

REF. & REV.

MERCED COLLEGE GREENHOUSE COMPLEX

GREENHOUSE COMPLEX

ELECTRICAL SITE PLAN

CONST. DOCUMENTS

DR. BY: AH
CH. BY: ZH
DATE: 02/13/2024
SCALE AS NOTED

E-101

IDENTIFICATION STAMP
DIV. OF THE STATE ARCHITECT
APP: 02-121754 INC:
REVIEWED FOR
SS ☐ FLS ☐ ACS ☑
DATE: 02/21/2024

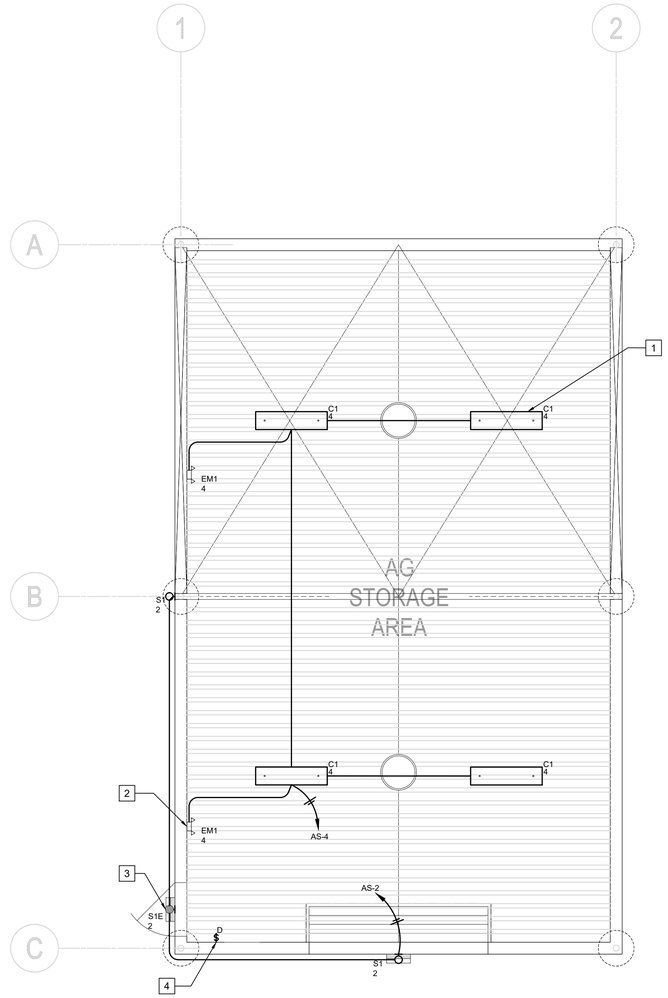

REFERENCE NOTES

1. PROVIDE CHAIN HUNG LED VAPOR-TIGHT LIGHT WITH DIMMING CONTROL NODE AND MOTION SENSOR.
2. PROVIDE EMERGENCY LIGHTING UNIT EQUIPMENT. COORDINATE LOCATION WITH STRUCTURE ELEMENT FOR MOUNTING. CONNECT WITH A CONSTANT HOT FROM THE INTERIOR LIGHTING CIRCUIT FOR CONTINUOUS CHARGING OF THE BATTERY.
3. PROVIDE LED WALL PACK LIGHT WITH INTEGRAL PHOTOCONTROL AND BI-LEVEL MOTION SENSOR. TYPE 'S1E' LIGHTS HAVE AN INTEGRAL EMERGENCY BATTERY PACK. CONNECT WITH A CONSTANT HOT FOR CONTINUOUS CHARGING OF BATTERY.
4. PROVIDE WIRELESS LIGHTING CONTROL SWITCH(ES) WITH W.P. COVER PLATE COMPATIBLE WITH SUPPLIED 0-10V DIMMING LUMINAIRES.

AG STORAGE LIGHTING PLAN

NORTH

SCALE: 1/4" - 1' 0"

thoma ENGINEERING
THOMA ELECTRIC, INC.
P.O. Box 1167 - 3562 Empleo St.
San Luis Obispo, CA 93406
Phone: (805) 543-3850
THOMA #23-8061

REGISTERED PROFESSIONAL ENGINEER
ZAHIR HUSAIN THOMA
NO. 20823
ELECTRICAL
STATE OF CALIFORNIA
EXPIRES: 09/30/24

Blair, Church & Flynn
CONSULTING ENGINEERS

CONSULTANT
Blair, Church & Flynn Consulting Engineers
4551 Clovis Avenue, Suite 200
Clovis, California 93612
Tel (559) 326-1400
Fax (559) 326-1500

REF. & REV.

MERCED COLLEGE GREENHOUSE COMPLEX

GREENHOUSE COMPLEX

AG STORAGE
LIGHTING PLAN

CONST. DOCUMENTS

DR. BY: AH.
CH. BY: ZH
DATE: 02/13/2024
SCALE AS NOTED

E-201

Drawing: K:\ENG\2023\23-061\23-8061_E201~E-205_BLDG LTG PLANS.dwg E-201 - EGF.dib
Plot by: aaackett Feb 12, 2024 4:40pm

Feb 12, 2024 - 4:40pm - aaackett - K:\ENG\2023\23-061\23-8061_E201~E-205_BLDG LTG PLANS.dwg

IDENTIFICATION STAMP
DIV. OF THE STATE ARCHITECT
APP: 02-121754 INC:
REVIEWED FOR
SS ☐ FLS ☐ ACS ☑
DATE: 02/21/2024

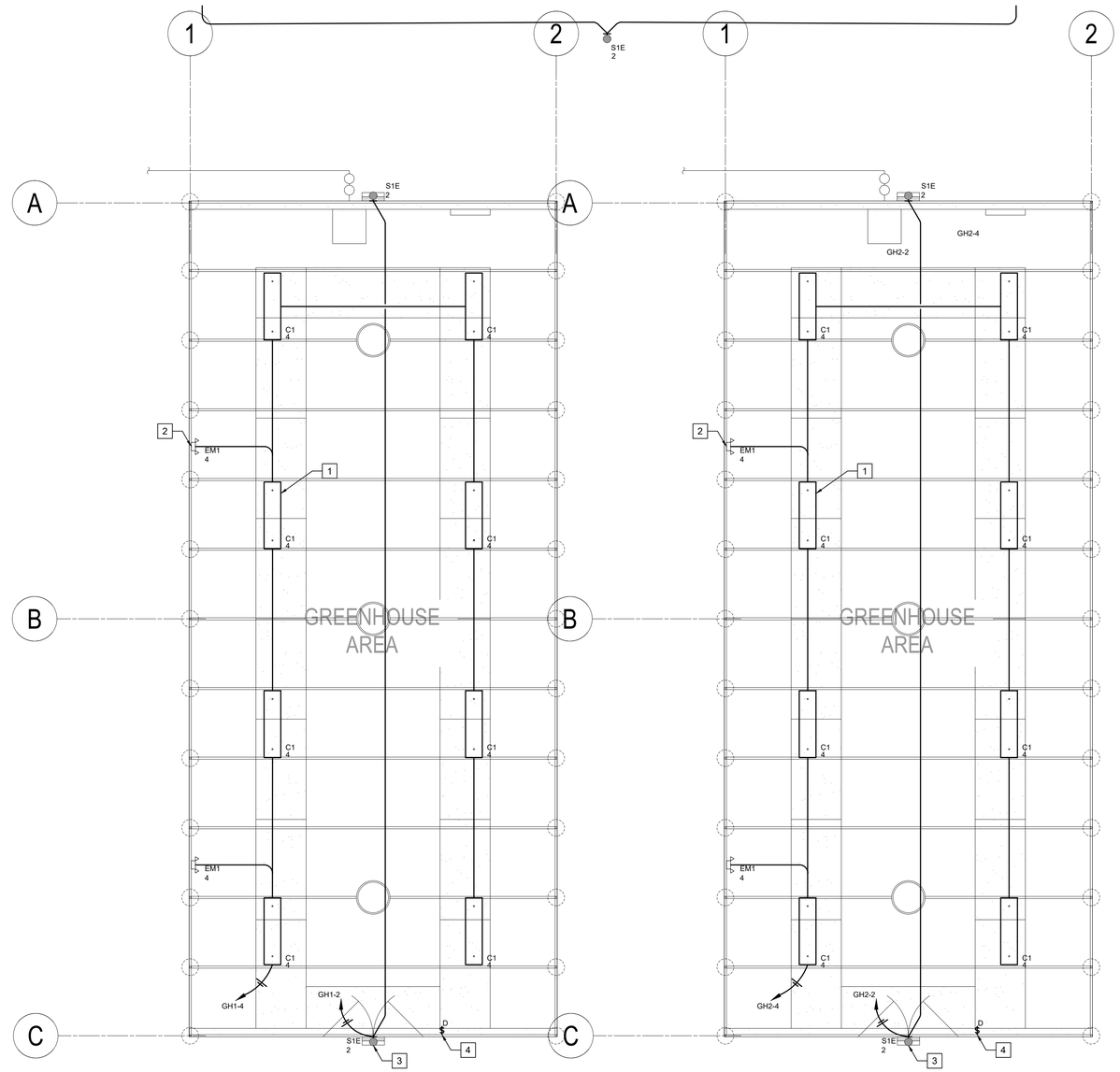

GREENHOUSE 1 & 2 LIGHTING PLANS

SCALE: 1/4" - 1' 0"

NORTH

☐ REFERENCE NOTES

1. PROVIDE CHAIN HUNG LED VAPOR-TIGHT LIGHT WITH DIMMING CONTROL NODE AND MOTION SENSOR.
2. PROVIDE EMERGENCY LIGHTING UNIT EQUIPMENT. COORDINATE LOCATION WITH STRUCTURE ELEMENT FOR MOUNTING. CONNECT WITH A CONSTANT HOT FROM THE INTERIOR LIGHTING CIRCUIT FOR CONTINUOUS CHARGING OF THE BATTERY.
3. PROVIDE LED WALL PACK LIGHT WITH INTEGRAL PHOTOCONTROL AND BI-LEVEL MOTION SENSOR. TYPE 'S1E' LIGHTS HAVE AN INTEGRAL EMERGENCY BATTERY PACK, CONNECT WITH A CONSTANT HOT FOR CONTINUOUS CHARGING OF BATTERY.
4. PROVIDE WIRELESS LIGHTING CONTROL SWITCH(ES) WITH W.P. COVER PLATE COMPATIBLE WITH SUPPLIED 0-10V DIMMING LUMINAIRES.

thoma ENGINEERING
THOMA ELECTRIC, INC.
P.O. Box 1167 - 3562 Empleo St.
San Luis Obispo, CA 93406
Phone: (805) 543-3850
THOMA #23-8061

REGISTERED PROFESSIONAL ENGINEER
JEFFREY M. THOMA
NO. 20823
ELECTRICAL
STATE OF CALIFORNIA
EXPIRES: 09/30/24

Blair, Church & Flynn
CONSULTING ENGINEERS

CONSULTANT
Blair, Church & Flynn
Consulting Engineers
451 Clovis Avenue,
Suite 200
Clovis, California 93612
Tel (559) 326-1400
Fax (559) 326-1500

REF. & REV.

MERCED COLLEGE GREENHOUSE COMPLEX

GREENHOUSE COMPLEX

GREENHOUSE 1 & 2
LIGHTING PLANS

CONST. DOCUMENTS

DR. BY: AH
CH. BY: ZH
DATE: 02/13/2024
SCALE AS NOTED

E-202

REFERENCE NOTES

1. PROVIDE PENDANT MOUNTED LED WITH ON BOARD DIMMING / MOTION SENSOR.
2. PROVIDE EMERGENCY LIGHTING UNIT EQUIPMENT. COORDINATE LOCATION WITH STRUCTURE ELEMENT FOR MOUNTING. CONNECT WITH A CONSTANT HOT FROM THE INTERIOR LIGHTING CIRCUIT FOR CONTINUOUS CHARGING OF THE BATTERY.
3. PROVIDE LED WALL PACK LIGHT WITH INTEGRAL PHOTOCONTROL AND BI-LEVEL MOTION SENSOR. TYPE 'S1E' LIGHTS HAVE AN INTEGRAL EMERGENCY BATTERY PACK, CONNECT WITH A CONSTANT HOT FOR CONTINUOUS CHARGING OF BATTERY.
4. INTERIOR LIGHTING CONTROL SWITCHES WITH W.P. COVER PLATE COMPATIBLE WITH 0-10V DIMMING LUMINARIES.
5. PROVIDE LINE VOLTAGE SWITCH WITH W.P. COVER PLATE FOR MANUAL ON/OFF CONTROL OF EXTERIOR FLOOD LIGHT.

IDENTIFICATION STAMP
DIV. OF THE STATE ARCHITECT
APP: 02-121754 INC:
REVIEWED FOR
SS ☐ FLS ☐ ACS ☑
DATE: 02/21/2024

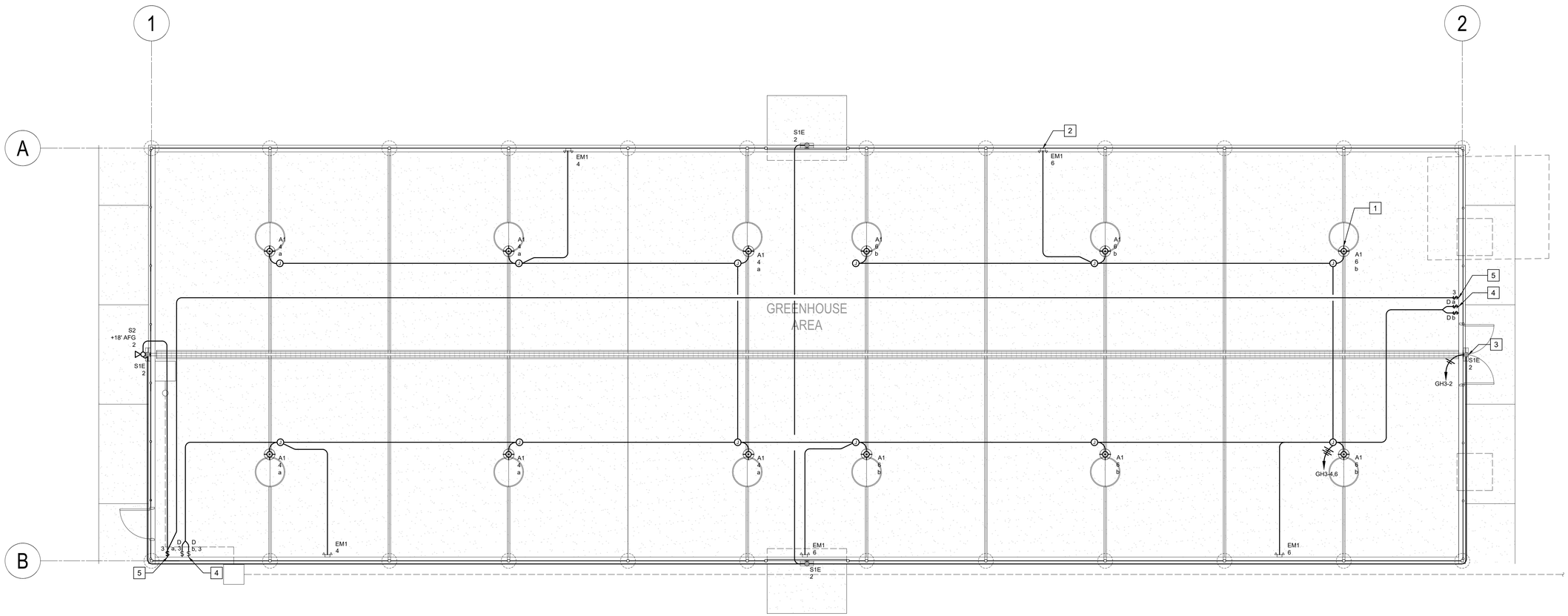

MAIN GREENHOUSE LIGHTING PLANS

SCALE: 3/16" - 1' 0"

NORTH

thoma ENGINEERING
THOMA ELECTRIC, INC.
P.O. Box 1167 - 3562 Empleo St.
San Luis Obispo, CA 93406
Phone: (805) 543-3850
THOMA #23-8061

REGISTERED PROFESSIONAL ENGINEER
ZAFER HAMAM
NO. 20823
ELECTRICAL
STATE OF CALIFORNIA
EXPIRES: 09/30/24

Blair, Church & Flynn
CONSULTING ENGINEERS

CONSULTANT
Blair, Church & Flynn Consulting Engineers
4551 Clovis Avenue, Suite 200
Clovis, California 93612
Tel (559) 326-1400
Fax (559) 326-1500

REF. & REV.

MERCED COLLEGE GREENHOUSE COMPLEX

GREENHOUSE COMPLEX

MAIN GREENHOUSE LIGHTING PLANS

CONST. DOCUMENTS

DR. BY: AH
CH. BY: ZH
DATE: 02/13/2024
SCALE AS NOTED

E-203

Feb 12, 2024 - 4:40pm - asackett - K:\ENG\2023\23-8061\23-8061_E201~E-205_BLDG LTG PLANS.dwg

Drawing: K:\ENG\2023\23-8061\23-8061_E201~E-205_BLDG LTG PLANS.dwg E-203 - BCF.dtb
Plot by: asackett Feb 12, 2024 - 4:40pm

IDENTIFICATION STAMP
DIV. OF THE STATE ARCHITECT
APP: 02-121754 INC:
REVIEWED FOR
SS ☐ FLS ☐ ACS ☑
DATE: 02/21/2024

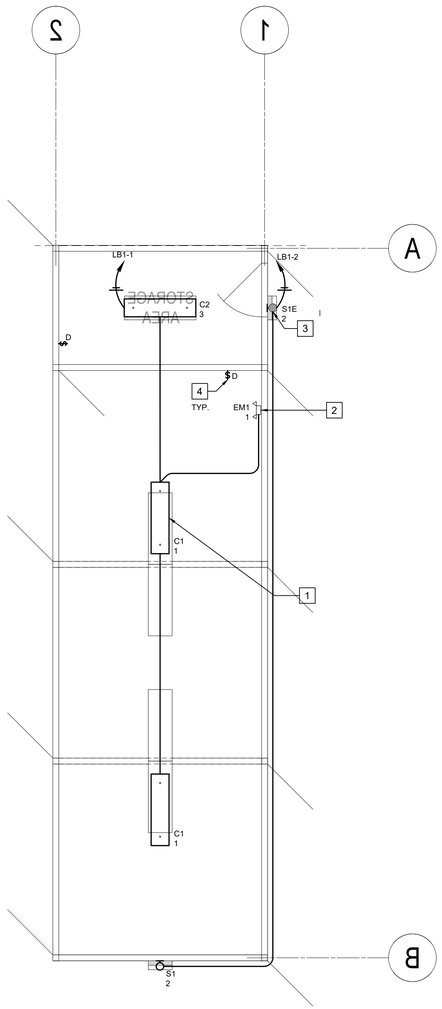

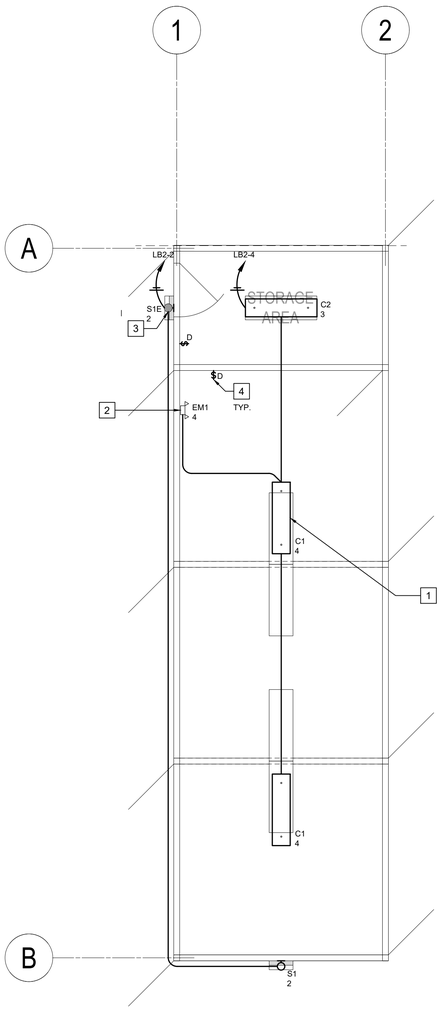

REFERENCE NOTES

1. PROVIDE CHAIN HUNG LED VAPOR-TIGHT LIGHT WITH DIMMING CONTROL NODE AND MOTION SENSOR.
2. PROVIDE EMERGENCY LIGHTING UNIT EQUIPMENT. COORDINATE LOCATION WITH STRUCTURE ELEMENT FOR MOUNTING. CONNECT WITH A CONSTANT HOT FROM THE INTERIOR LIGHTING CIRCUIT FOR CONTIOUS CHARGING OF THE BATTERY.
3. PROVIDE LED WALL PACK LIGHT WITH INTEGRAL PHOTOCONTROL AND BI-LEVEL MOTION SENSOR. TYPE 'S1E' LIGHTS HAVE AN INTEGRAL EMERGENCY BATTERY PACK, CONNECT WITH A CONSTANT HOT FOR CONTINUOUS CHARGING OF BATTERY.
4. PROVIDE WIRELESS LIGHTING CONTROL SWITCH(ES) WITH W.P. COVER PLATE COMPATIBLE WITH SUPPLIED 0-10V DIMMING LUMINAIRES.

NORTH

LOAFING BARN LIGHTING PLAN

SCALE: 1/4" - 1' 0"

thoma ENGINEERING
THOMA ELECTRIC, INC.
P.O. Box 1167 - 3562 Empleo St.
San Luis Obispo, CA 93406
Phone: (805) 543-3850
THOMA #23-8061

Registered PROFESSIONAL ENGINEER
Zaf Hadi M. Thoma
NO. 20823
ELECTRICAL
STATE OF CALIFORNIA
EXPIRES: 09/30/24

Blair, Church & Flynn
CONSULTING ENGINEERS
CONSULTANT
Blair, Church & Flynn Consulting Engineers
4551 Clovis Avenue, Suite 200
Clovis, California 93612
Tel (559) 326-1400
Fax (559) 326-1200

REF. & REV.

MERCED COLLEGE GREENHOUSE COMPLEX

GREENHOUSE COMPLEX

LOAFING BARN LIGHTING PLAN

CONST. DOCUMENTS

DR. BY: AH
CH. BY: ZH
DATE: 02/13/2024
SCALE AS NOTED

E-204

Feb 12, 2024 - 4:40pm - asackett - K:\ENG\2023\23-8061\23-8061_E201~E205_BLDG LTG PLANS.dwg
Drawing: K:\ENG\2023\23-8061\23-8061_E201~E205_BLDG LTG PLANS.dwg E-204 - BOF.dib
Plot by: asackett Feb 12, 2024 4:40pm

IDENTIFICATION STAMP
DIV. OF THE STATE ARCHITECT
APP: 02-121754 INC:
REVIEWED FOR
SS ☐ FLS ☐ ACS ☑
DATE: 02/21/2024

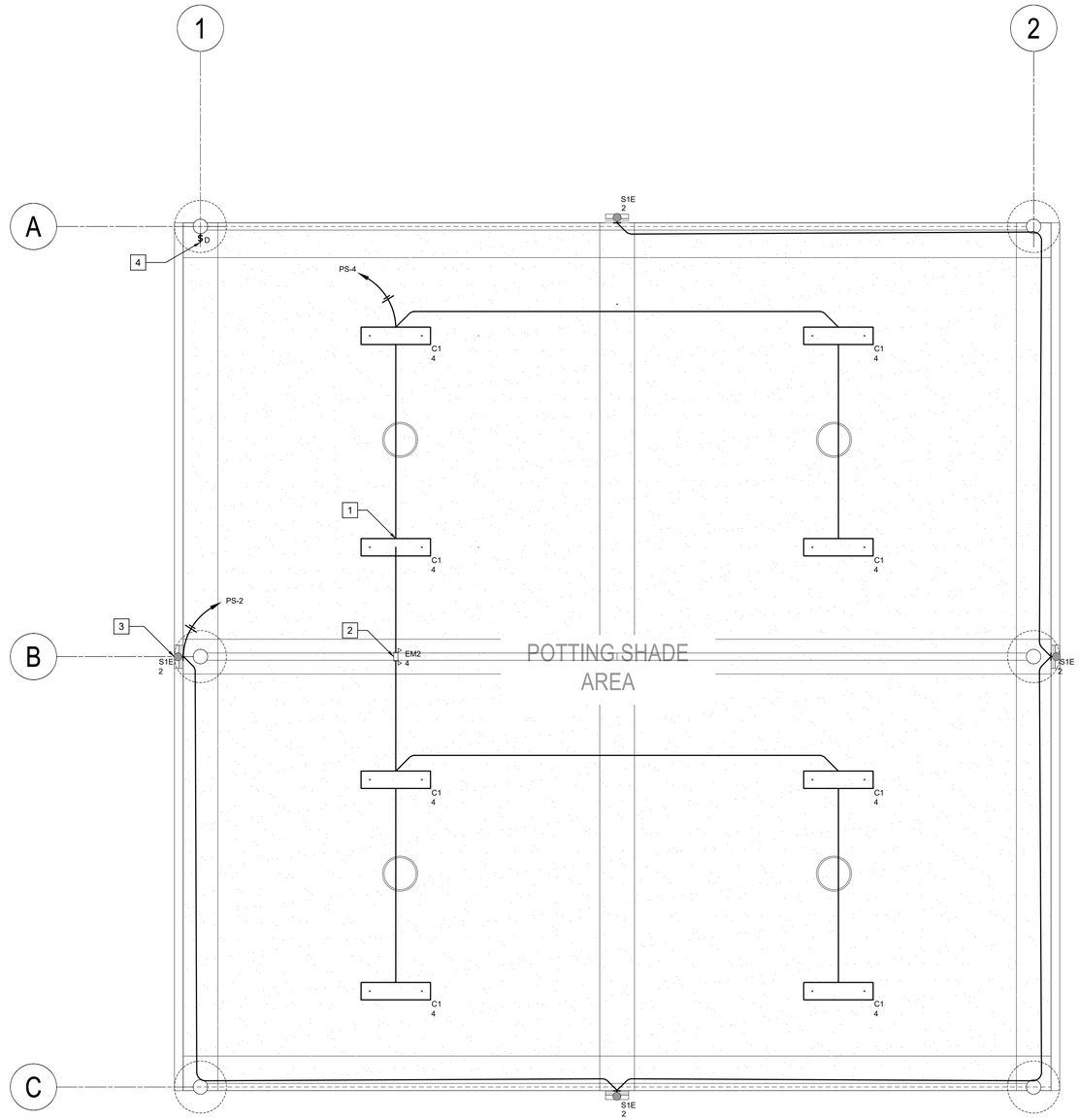

POTTING SHADE LIGHTING PLAN

SCALE: 1/4" - 1' 0"

NORTH

☐ REFERENCE NOTES

1. PROVIDE CHAIN HUNG LED VAPOR-TIGHT LIGHT WITH DIMMING CONTROL NODE AND MOTION SENSOR.
2. PROVIDE EMERGENCY LIGHTING UNIT EQUIPMENT. COORDINATE LOCATION WITH STRUCTURE ELEMENT FOR CEILING MOUNTING. CONNECT WITH A CONSTANT HOT FROM THE INTERIOR LIGHTING CIRCUIT FOR CONTIOUS CHARGING OF THE BATTERY.
3. PROVIDE LED WALL PACK LIGHT WITH INTEGRAL PHOTOCONTROL AND BI-LEVEL MOTION SENSOR. TYPE 'S1E' LIGHTS HAVE AN INTEGRAL EMERGENCY BATTERY PACK, CONNECT WITH A CONSTANT HOT FOR CONTINUOUS CHARGING OF BATTERY.
4. PROVIDE WIRELESS LIGHTING CONTROL SWITCH(ES) WITH W.P. COVER PLATE COMPATABLE WITH SUPPLIED 0-10V DIMMING LUMINAIRES.

thoma ENGINEERING
THOMA ELECTRIC, INC.
P.O. Box 1167 - 3562 Empleo St.
San Luis Obispo, CA 93406
Phone: (805) 543-3850
THOMA #23-8061
REGISTERED PROFESSIONAL ENGINEER
JOSEPH M. THOMA
NO. 20823
ELECTRICAL
STATE OF CALIFORNIA
EXPIRES: 09/30/24

Blair, Church & Flynn
CONSULTING ENGINEERS

CONSULTANT
Blair, Church & Flynn Consulting Engineers
4551 Clovis Avenue, Suite 200
Clovis, California 93612
Tel (559) 326-1400
Fax (559) 326-1500

REF. & REV.

MERCED COLLEGE GREENHOUSE COMPLEX

GREENHOUSE COMPLEX

POTTING SHADE LIGHTING PLAN

CONST. DOCUMENTS

DR. BY: AH.
CH. BY: ZH
DATE: 02/13/2024
SCALE AS NOTED

E-205

IDENTIFICATION STAMP
DIV. OF THE STATE ARCHITECT
APP: 02-121754 INC:
REVIEWED FOR
SS ☐ FLS ☐ ACS ☑
DATE: 02/21/2024

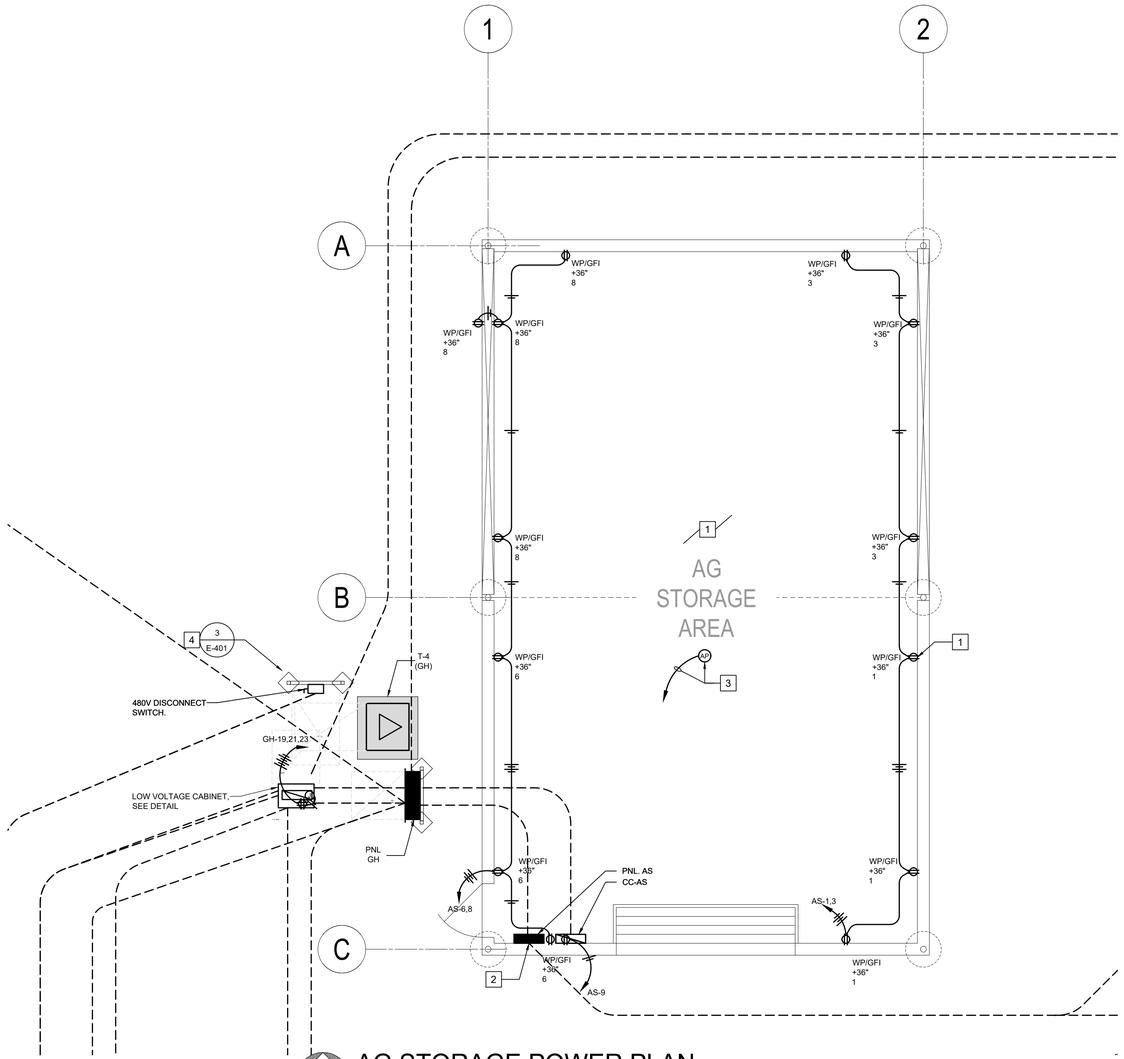

AG STORAGE POWER PLAN

SCALE: 1/4" - 1' 0"

NORTH

REFERENCE NOTES

1. COORDINATE DEVICE MOUNTING LOCATIONS WITH APPROVED SHOP DRAWINGS. (TYP.)
2. PROVIDE BACKING PLATE OR SUPPORT TO STRUCTURE FOR POWER PANEL AND COMMUNICATIONS CABINET.(TYP.)
3. (F) WIRELESS NETWORK ACCESS POINT AT CEILING. PROVIDE CONDUIT AND J-BOX ONLY. EXTEND CONDUIT TO COMMUNICATIONS CABINET. ACCESS POINT FURNISHED AND INSTALLED BY DISTRICT.
4. SEE DETAIL FOR LAYOUT OF ELECTRICAL EQUIPMENT.

811 Know what's below. Call before you dig.

thoma ENGINEERING
THOMA ELECTRIC, INC.
P.O. Box 1167 - 3562 Empleo St.
San Luis Obispo, CA 93406
Phone: (805) 543-3850
THOMA #23-8061
REGISTERED PROFESSIONAL ENGINEER NO. 20823 ELECTRICAL STATE OF CALIFORNIA
EXPIRES: 09/30/24
Blair, Church & Flynn CONSULTING ENGINEERS
CONSULTANT
Blair, Church & Flynn Consulting Engineers
451 Clovis Avenue, Suite 200
Clovis, California 93612
Tel (559) 326-1400
Fax (559) 326-1500

REF. & REV.

MERCED COLLEGE GREENHOUSE COMPLEX

GREENHOUSE COMPLEX

AG STORAGE POWER PLAN

CONST. DOCUMENTS

DR. BY: AH
CH. BY: ZH
DATE: 02/13/2024
SCALE AS NOTED

E-301

IDENTIFICATION STAMP
DIV. OF THE STATE ARCHITECT
APP: 02-121754 INC: A
REVIEWED FOR
SS ☐ FLS ☐ ACS ☑
DATE: 02/21/2024

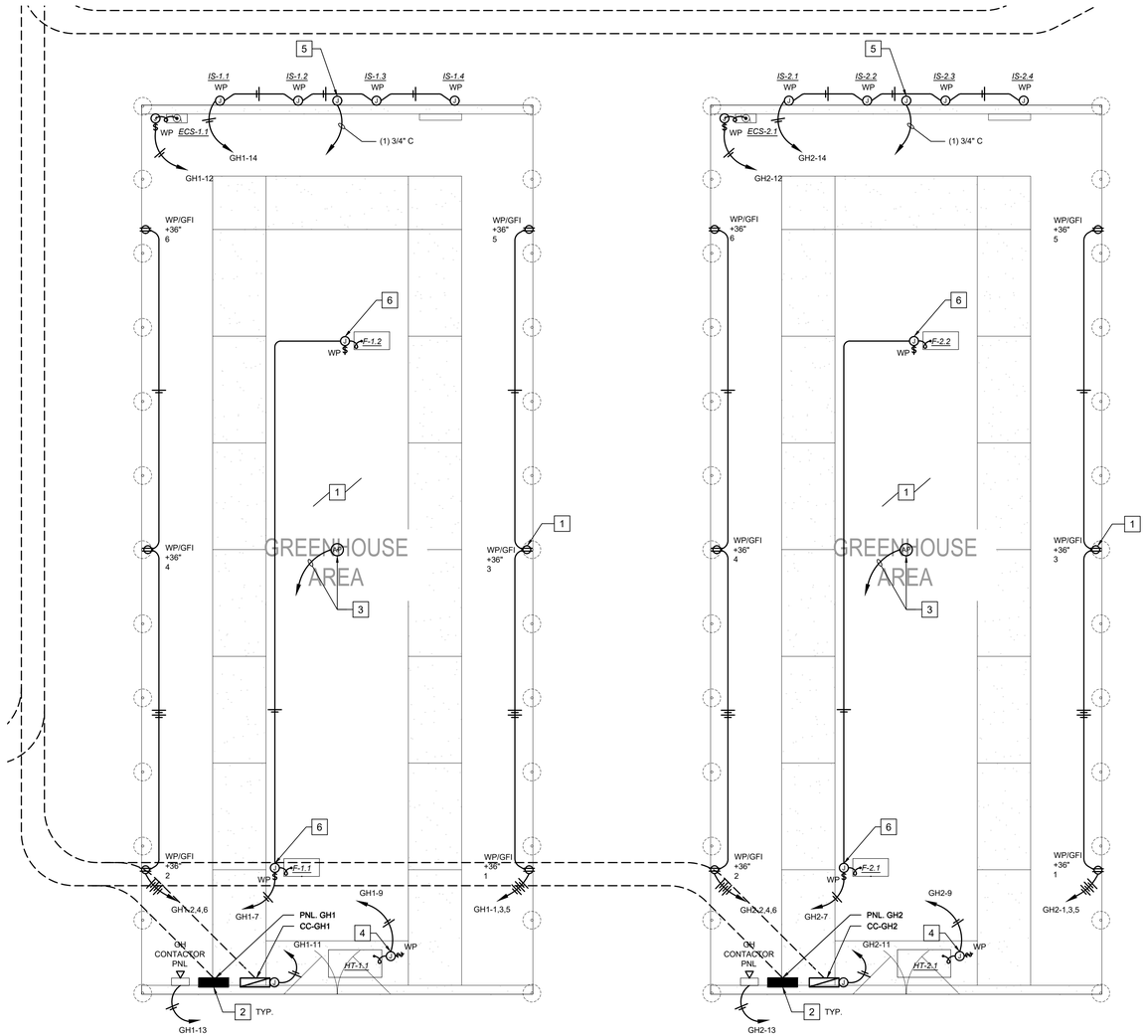

GREENHOUSE 1 & 2 POWER PLANS

NORTH

SCALE: 1/4" - 1' 0"

REFERENCE NOTES

1. COORDINATE DEVICE MOUNTING LOCATIONS WITH APPROVED SHOP DRAWINGS. (TYP.)
2. PROVIDE BACKING PLATE OR SUPPORT TO STRUCTURE FOR PANELS AND COMMUNICATIONS CABINET.(TYP.)
3. (F) WIRELESS NETWORK ACCESS POINT AT CEILING. PROVIDE CONDUIT AND J-BOX ONLY. EXTEND CONDUIT TO COMMUNICATIONS CABINET. ACCESS POINT FURNISHED AND INSTALLED BY DISTRICT.
4. CONNECT HEATER THROUGH LOCKING W.P. DISCONNECT SWITCH.
5. WEATHER STATION MOUNTED TO EXTERIOR. PROVIDE CONDUIT TO GREENHOUSE CONTROL PANEL AND CONTROL WIRE PER MANUFACTURES REQUIREMENTS. COORDINATE FINAL LOCATION WITH DISTRICT.
6. CONNECT INTERNAL FAN BRANCH CIRCUIT THROUGH GREENHOUSE CONTACTOR PANEL AND COORDINATE WITH DISTRICT CONTROLS CONTRACTOR.

811 Know what's below. Call before you dig.

thoma ENGINEERING
THOMA ELECTRIC, INC.
P.O. Box 1167 - 3562 Empleo St.
San Luis Obispo, CA 93406
Phone: (805) 543-3850
THOMA #23-8061
REGISTERED PROFESSIONAL ENGINEER NO. 20823 ELECTRICAL STATE OF CALIFORNIA
EXPIRES: 09/30/24

Blair, Church & Flynn
CONSULTING ENGINEERS
CONSULTANT
Blair, Church & Flynn Consulting Engineers
4551 Clovis Avenue, Suite 200
Clovis, California 93612
Tel (559) 326-1400
Fax (559) 326-1500

REF. & REV.

MERCED COLLEGE GREENHOUSE COMPLEX

GREENHOUSE COMPLEX

GREENHOUSE 1 & 2 POWER PLANS

CONST. DOCUMENTS

DR. BY: AH
CH. BY: ZH
DATE: 02/13/2024
SCALE AS NOTED

E-302

Feb 12, 2024 - 4:41pm - asackett - K:\ENG\2023\23-8061\23-8061_E301~E-305_BLDG PWR PLANS.dwg

Drawing: K:\ENG\2023\23-8061\23-8061_E301~E-305_BLDG PWR PLANS.dwg E-302 - BC7.dtb
Plot by: asackett Feb 12, 2024 - 4:41pm

REFERENCE NOTES

1. COORDINATE DEVICE MOUNTING LOCATIONS WITH APPROVED SHOP DRAWINGS. (TYP.)
2. PROVIDE BACKING PLATE OR SUPPORT TO STRUCTURE FOR PANELS AND COMMUNICATIONS CABINET.(TYP.)
3. (F) WIRELESS NETWORK ACCESS POINT AT CEILING. PROVIDE CONDUIT AND J-BOX ONLY. EXTEND CONDUIT TO COMMUNICATIONS CABINET. ACCESS POINT FURNISHED AND INSTALLED BY DISTRICT.
4. CONNECT HEATER THROUGH LOCKING W.P. DISCONNECT SWITCH.
5. CONNECT EXHAUST FANS THROUGH FUSED W.P. NEMA 3R DISCONNECT.
6. WEATHER STATION MOUNTED TO EXTERIOR GABLE PEAK. PROVIDE CONDUIT TO GREENHOUSE CONTROL PANEL AND CONTROL WIRE PER MANUFACTURES REQUIREMENTS. COORDINATE FINAL LOCATION WITH DISTRICT.
7. CONNECT INTERNAL FAN BRANCH CIRCUIT THROUGH GREENHOUSE CONTACTOR PANEL AND COORDINATE WITH DISTRICT CONTROLS CONTRACTOR. TYPICAL.
8. CONNECT ROOF VENT BRANCH CIRCUIT THROUGH ROOF VENT CONTROL PANELS. COORDINATE WITH DISTRICT CONTROLS CONTRACTOR.
9. COORDINATE WATER BOOM POWER AND CONTROLS REQUIREMENTS WITH MANUFACTURES RECOMMENDATIONS AND DISTRICT CONTROLS CONTACTOR.

IDENTIFICATION STAMP
DIV. OF THE STATE ARCHITECT
APP: 02-121754 INC:
REVIEWED FOR
SS ☐ FLS ☐ ACS ☑
DATE: 02/21/2024

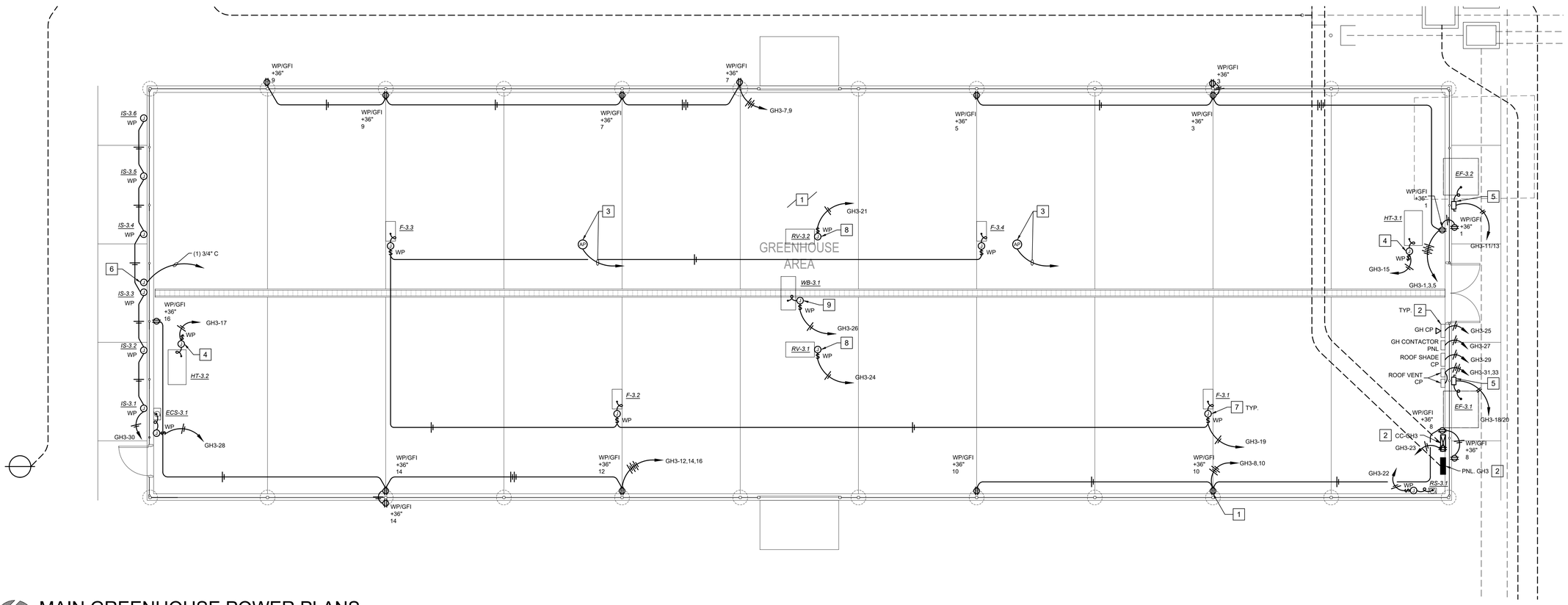

MAIN GREENHOUSE POWER PLANS

NORTH

SCALE: 3/16" - 1' 0"

811 Know what's below. Call before you dig.

thoma ENGINEERING
THOMA ELECTRIC, INC.
P.O. Box 1167 - 3562 Empleo St.
San Luis Obispo, CA 93406
Phone: (805) 543-3850
THOMA #23-8061
REGISTERED PROFESSIONAL ENGINEER NO. 20823 ELECTRICAL STATE OF CALIFORNIA
EXPIRES: 09/30/24
Blair, Church & Flynn CONSULTING ENGINEERS
CONSULTANT
Blair, Church & Flynn Consulting Engineers
451 Clovis Avenue, Suite 200
Clovis, California 93612
Tel (559) 326-1400
Fax (559) 326-1500

REF. & REV.

MERCED COLLEGE GREENHOUSE COMPLEX

GREENHOUSE COMPLEX

MAIN GREENHOUSE POWER PLAN

CONST. DOCUMENTS

DR. BY: AH
CH. BY: ZH
DATE: 02/13/2024
SCALE AS NOTED

E-303

Feb 12, 2024 - 4:41pm - asackett - K:\ENG\2023\23-8061\23-8061_E301-E-305_BLDG PWR PLANS.dwg

Drawing: K:\ENG\2023\23-0061\23-8061_E301-E-305_BLDG PWR PLANS.dwg, E-303 - BCF.ctb
Plot by: asackett - Feb 12, 2024 - 4:41pm

IDENTIFICATION STAMP
DIV. OF THE STATE ARCHITECT
APP: 02-121754 INC:
REVIEWED FOR
SS ☐ FLS ☐ ACS ☑
DATE: 02/21/2024

☐ REFERENCE NOTES

1. PROVIDE BACKING PLATE OR SUPPORT TO STRUCTURE FOR PANEL AND COMMUNICATIONS CABINET.(TYP.)
2. PROVIDE BUILDING COMMUNICATION J-BOX ATTACHED TO STRUCTURE.

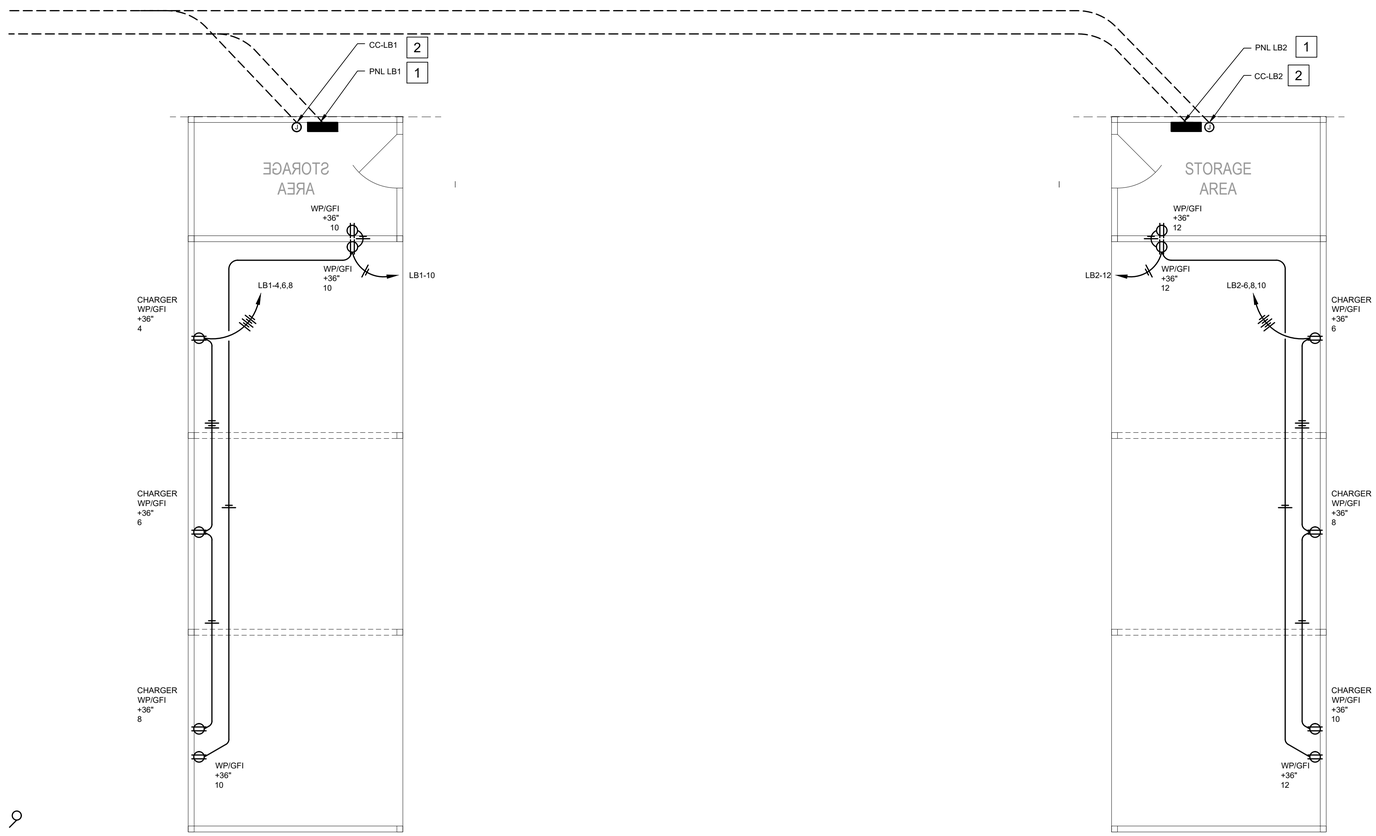

LOAFING BARN POWER PLAN

NORTH

SCALE: 1/4" - 1' 0"

811 Know what's below. Call before you dig.

thoma ENGINEERING
THOMA ELECTRIC, INC.
P.O. Box 1167 - 3562 Empleo St.
San Luis Obispo, CA 93406
Phone: (805) 543-3850
THOMA #23-8061
REGISTERED PROFESSIONAL ENGINEER NO. 20823 ELECTRICAL STATE OF CALIFORNIA
EXPIRES: 09/30/24
Blair, Church & Flynn CONSULTING ENGINEERS
CONSULTANT
Blair, Church & Flynn Consulting Engineers
451 Clovis Avenue, Suite 200
Clovis, California 93612
Tel (559) 326-1400
Fax (559) 326-1500

REF. & REV.

MERCED COLLEGE GREENHOUSE COMPLEX

GREENHOUSE COMPLEX

LOAFING BARNS POWER PLAN

CONST. DOCUMENTS

DR. BY: AH
CH. BY: ZH
DATE: 02/13/2024
SCALE AS NOTED

E-304

IDENTIFICATION STAMP
DIV. OF THE STATE ARCHITECT
APP: 02-121754 INC:
REVIEWED FOR
SS ☐ FLS ☐ ACS ☑
DATE: 02/21/2024

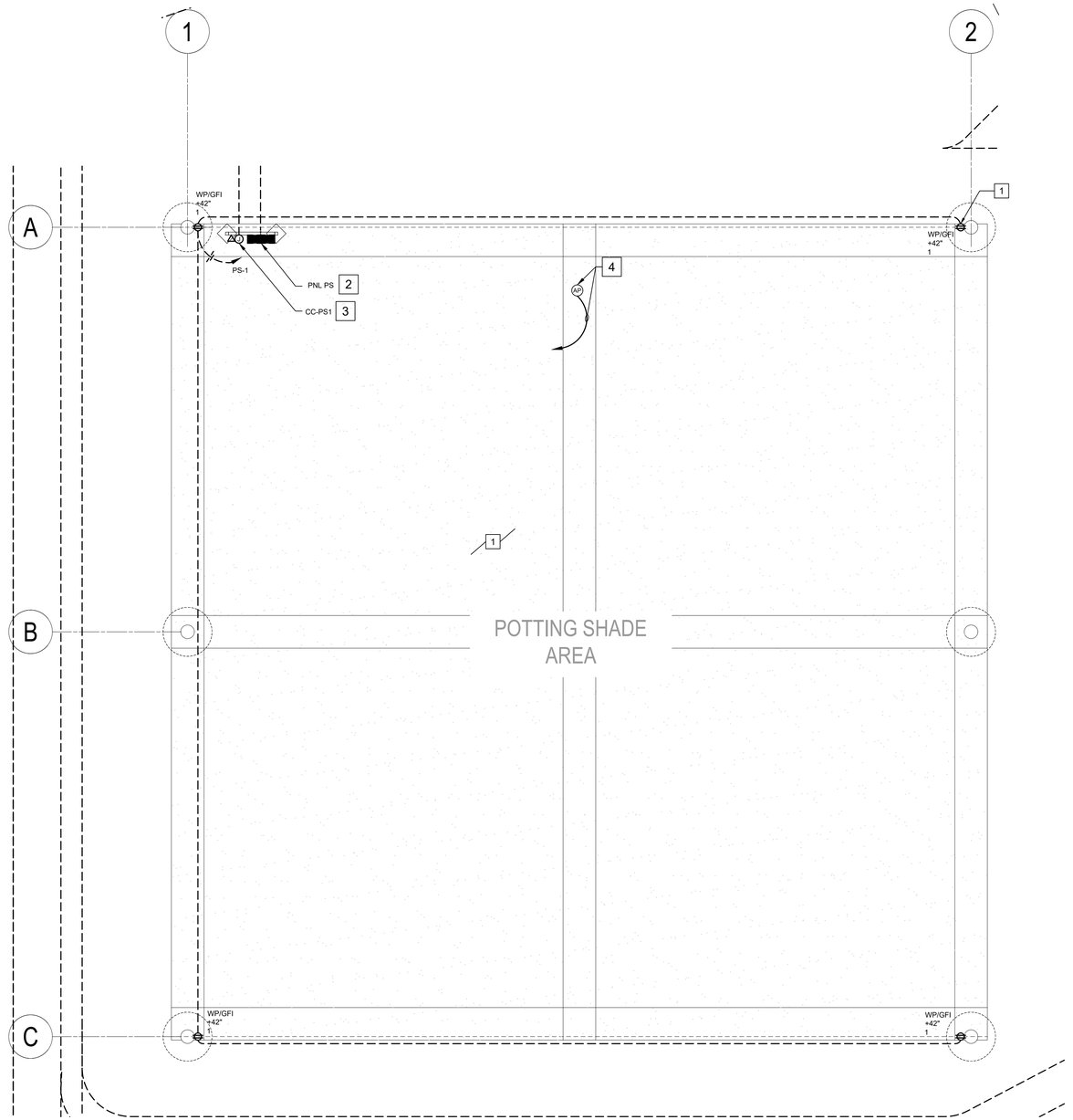

POTTING SHADE POWER PLAN

SCALE: 1/4" - 1' 0"

NORTH

☐ REFERENCE NOTES

1. COORDINATE DEVICE MOUNTING LOCATIONS WITH APPROVED SHOP DRAWINGS. (TYP.)
2. PROVIDE BUILDING NEMA 3R PANELBOARD MOUNTED TO UNISTRUT SUPPORT FRAME .
3. PROVIDE BUILDING COMMUNICATIONS 8"X8", NEMA 3R J-BOX MOUNTED TO UNISTRUT SUPPORT FRAME WITH W.P. TELECOM OUTLET .
4. (F) WIRELESS NETWORK ACCESS POINT AT CEILING. PROVIDE CONDUIT AND J-BOX ONLY. EXTEND CONDUIT TO COMMUNICATIONS CABINET. ACCESS POINT FURNISHED AND INSTALLED BY DISTRICT.

811 Know what's below. Call before you dig.

thoma ENGINEERING
THOMA ELECTRIC, INC.
P.O. Box 1167 - 3562 Empleo St.
San Luis Obispo, CA 93406
Phone: (805) 543-3850
THOMA #23-8061
REGISTERED PROFESSIONAL ENGINEER
NO. 20823
ELECTRICAL
STATE OF CALIFORNIA
EXPIRES: 09/30/24

Blair, Church & Flynn
CONSULTING ENGINEERS

CONSULTANT
Blair, Church & Flynn Consulting Engineers
4551 Clovis Avenue, Suite 200
Clovis, California 93612
Tel (559) 326-1400
Fax (559) 326-1500

REF. & REV.

MERCED COLLEGE GREENHOUSE COMPLEX

GREENHOUSE COMPLEX

POTTING SHADE POWER PLAN

CONST. DOCUMENTS

DR. BY: AH
CH. BY: ZH
DATE: 02/13/2024
SCALE AS NOTED

E-305

Feb 12, 2024 - 4:41pm - asackett - K:\ENG\2020\23-806\123-8061_E301-E-305_BLDG PWR PLANS.dwg

Drawing: K:\ENG\2020\23-806\123-8061_E301-E-305_BLDG PWR PLANS.dwg E-305 - BOP.dtb
Plot by: asackett Feb 12, 2024 - 4:41pm

IDENTIFICATION STAMP
DIV. OF THE STATE ARCHITECT
APP: 02-121754 INC:
REVIEWED FOR
SS ☐ FLS ☐ ACS ☑
DATE: 02/21/2024

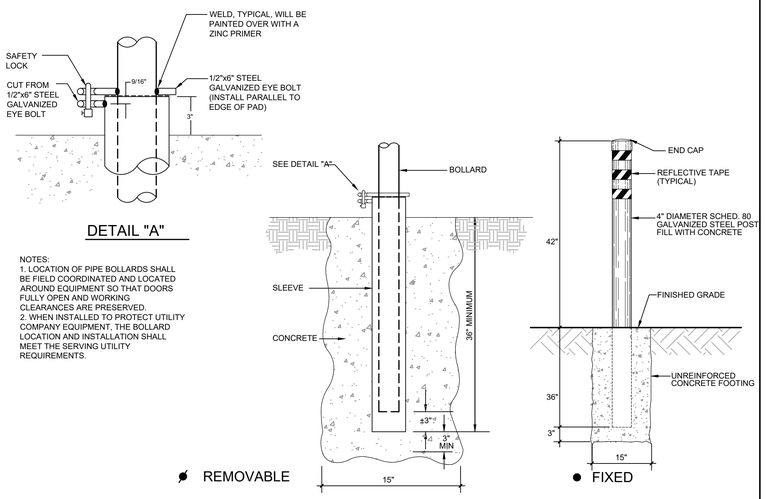

NOTES:
1. LOCATION OF PIPE BOLLARDS SHALL BE FIELD COORDINATED AND LOCATED AROUND EQUIPMENT SO THAT DOORS FULLY OPEN AND WORKING CLEARANCES ARE PRESERVED.
2. WHEN INSTALLED TO PROTECT UTILITY COMPANY EQUIPMENT, THE BOLLARD LOCATION AND INSTALLATION SHALL MEET THE SERVING UTILITY REQUIREMENTS.

5 TYP. PROTECTIVE PIPE BOLLARD
SCALE:

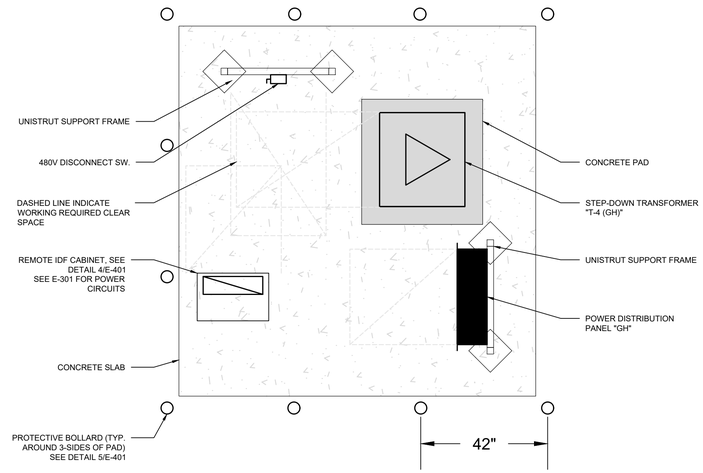

3 GREENHOUSE COMPLEX ELECT. EQUIP. LAYOUT
SCALE: NTS

NOTE:
CONDUITS SHOWN ARE TYPICAL. VERIFY EXACT NUMBER OF CONDUITS FROM SITE PLAN, SINGLE LINE DIAGRAM AND LOW VOLATGE SYSTEM RISERS.

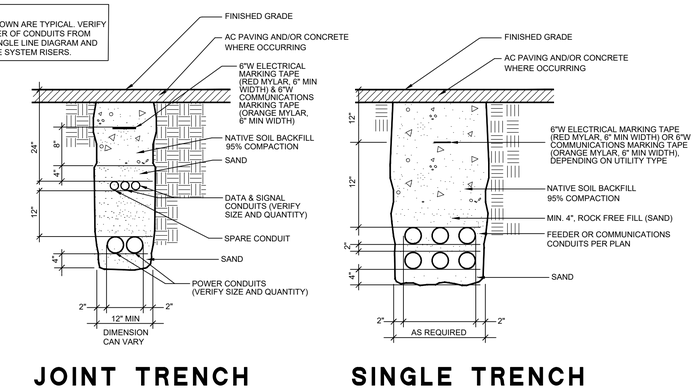

1 TYPICAL CONDUIT IN TRENCH
SCALE: NTS

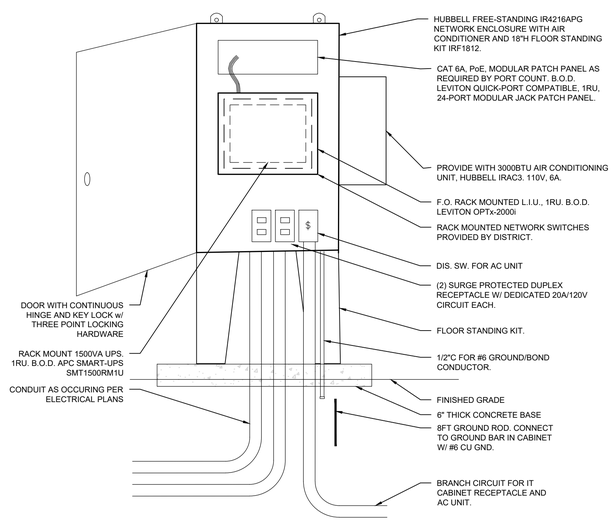

4 I.T. EQUIP. ENCLOSURE (REMOTE IDF)
SCALE: NTS

NOTES:
1. PULL BOXES SHALL BE INTERMITTENT TRAFFIC RATED.
2. PULLBOXES CONSTRUCTED OF REINFORCED POLYMER WITH TRAFFIC RATING ARE ACCEPTABLE.

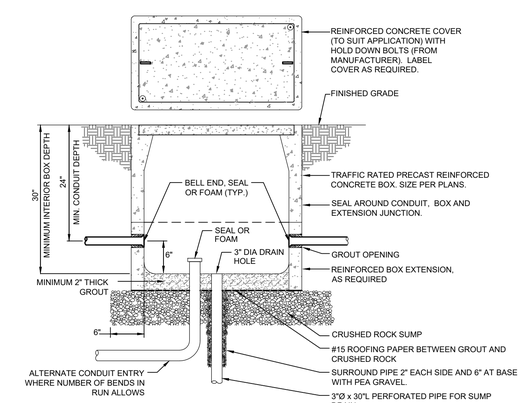

2 TYPICAL PULL BOX, 24" X 36" AND SMALLER
SCALE: NTS

thoma ENGINEERING
THOMA ELECTRIC, INC.
P.O. Box 1167 - 3562 Empleo St.
San Luis Obispo, CA 93406
Phone: (805) 543-3850
THOMA #23-8061
REGISTERED PROFESSIONAL ENGINEER
ALEXANDER M. HEBERT
NO. 20823
ELECTRICAL
STATE OF CALIFORNIA
EXPIRES: 09/30/24
Blair, Church & Flynn
CONSULTING ENGINEERS
CONSULTANT
Blair, Church & Flynn Consulting Engineers
451 Clovis Avenue, Suite 200
Clovis, California 93612
Tel (559) 326-1400
Fax (559) 326-1500

REF. & REV.

MERCED COLLEGE GREENHOUSE COMPLEX
GREENHOUSE COMPLEX
ELECTRICAL DETAILS
CONST. DOCUMENTS
DR. BY: AH
CH. BY: ZH
DATE: 02/13/2024
SCALE AS NOTED
E-401

Feb 12, 2024 - 4:41 pm - asackett - K:\ENG\2023\23-806\123-8061_E401_DETAILS.dwg

Drawing: K:\ENG\2023\23-806\123-8061_E401_DETAILS.dwg E-401 - 8x24 .ctb
Plot by: asackett Feb 12, 2024 - 4:41pm

DESIGN CRITERIA	
BASE LOCATION LOCATED AT BOTTOM OF BASEPLATE/TOP OF FOOTING	
DESCRIPTION	DESIGN VALUES
DEAD AND LIVE LOADS	
ROOF LIVE LOAD	20 PSF
ROOF DEAD LOAD (SUPERIMPOSED ON FRAME)	5 PSF MAX
ROOF PANEL DEAD LOAD	M=1.1 PSF, G = 1.2 PSF, S = 1.3 PSF
COLLATERAL DEAD LOAD	M = 3.9 PSF, G = 3.8 PSF, S = 3.7 PSF
ROOF LIVE LOAD	
ROOF LIVE LOAD, L_r	20 PSF
ROOF SNOW LOAD	
GROUND SNOW LOAD, P_g	20 PSF
RISK CATEGORY	II
ROOF SNOW LOAD: SLOPED, P_s	20 PSF
FOR SNOW LOAD CONDITIONS ONLY - SITE APPLICATION REVIEWER SHALL VERIFY THE STTRUCTURE SHALL BE LOCATED AT LEAST 20 FEET	
FROM ANY ADJACENT STRUCTURE FOR SNOW DRIFT.	
SNOW LOAD SLOPE FACTOR, C_s	1.0
SNOW LOAD EXPOSURE FACTOR, C_e	1.0
SNOW LOAD IMPORTANCE FACTOR, I_s	1.0
THERMAL FACTOR, C_t	1.2
LOWEST ANTICIPATED SERVICE TEMPERATURE	30˚
WIND DESIGN	
BASIC WIND SPEED (3 SECOND GUST), V_{ult}, V_{asd}	100 MPH, 78 MPH
RISK CATEGORY	II
EXPOSURE CATEGORY	C
FACTORS: K_z, K_{zt}, K_d	0.85, 1.0, 0.85
$q_h = 0.00256\ K_z\ K_{zt}\ K_d\ V^2$	18.50 PSF
C_{NW} PER ASCE FIGURE 27.3-5 ROOF ANGLE 18.43 - CLEAR / OBSTRUCTED	CASE A (1.1 / -1.2) CASE B (0.01 / -0.69)
C_{NL} PER ASCE FIGURE 27.3-5 ROOF ANGLE 18.43 - CLEAR / OBSTRUCTED	CASE A (-0.17 / -1.09) CASE B (-0.96 / -1.65)
C_{N} PER ASCE FIGURE 27.3-7 PARALLEL TO RIDGE - CLEAR / OBSTRUCTED (< h)	CASE A (-0.8 / -1.2) CASE B (0.8 / 0.5)
C_{N} PER ASCE FIGURE 27.3-7 PARALLEL TO RIDGE - CLEAR / OBSTRUCTED (> h, < 2h)	CASE A (-0.6 / -0.9) CASE B (0.5 / 0.5)
C_{N} PER ASCE FIGURE 27.3-7 PARALLEL TO RIDGE - CLEAR / OBSTRUCTED (>2h)	CASE A (-0.3 / -0.6) CASE B (0.3 / 0.3)
COMPONENTS & CLADDING - C_N (PRESSURE/SUCTION) CLEAR / OBSTRUCTED	ZONE 3 - (2.29 / -2.11) / (1.0 / -3.0)
	ZONE 2 - (1.77 / -1.63) / (0.8 / -2.3)
	ZONE 1 - (1.15 / -1.05) / (0.5 / -1.5)
SEISMIC DESIGN	
LATERAL FORCE RESISTING SYSTEM	STEEL - ORDINARY CANTILEVER COLUMN
ANALYSIS PROCEDURE	EQUIVALENT LATERAL FORCE
SESIMIC IMORTANCE FACTOR, I_e	1.0
SEISMIC SITE CLASS	D
MCE_R SPECTRAL RESPONSE ACCELERATION @ 0.2 s, S_S	2.60
MCE_R SPECTRAL RESPONSE ACCELERATION @ 0.2 s, S_1	0.90
SHORT PERIOD SITE COEFFICIENT, F_a	1.20
LONG PERIOD COEFFICIENT, F_v	1.70
FUNDAMENTAL PERIOD OF THE STRUCTURE, T (WORST CASE FOR ALL STRUCTURES)	0.152 s
DESIGN SPECTRAL RESPONSE ACCELERATION AT SHORT PERIOD, S_{DS}	2.08 ☐
DESIGN SPECTRAL RESPONSE ACCELERATION AT SHORT PERIOD, S_{DS} - USED TO DETERMINE Cs (WITH CAP PER ASCE 7 12.8.1.3) SOIL PROPERTIES MAY NOT BE CLASSIFIED AS SITE CLASS E	2.08 * 0.70 = 1.456 ☐
DESIGN SPECTRAL RESPONSE ACCELERATION AT 1-s PERIODS, S_{D1}	1.02
SEISMIC DESIGN CATEGORY	E
SITE SPECFIC RESPONSE ANALYSIS NOT REQUIRED PER ASCE 7 11.4.8 EXCEPTION 2	T_s = 0.49 s ; T < 1.5 * T_s
RESPONSE MODIFICATION FACTOR, R	1.25
OVERSTRENGTH FACTOR, Ω	1.25
REDUNDANCY FACTOR, ρ	1.0
HORIZONTAL OR VERTICAL IRREGULARITIES	NONE
SEISMIC RESPONSE COEFFICIENT, C_s (20' WIDE, 30' WIDE, 40' WIDE)	1.16 ; 1.00 ; 1.00
DESIGN BASE SHEAR, V (20' WIDE, 30' WIDE, 40' WIDE) (WORST CASE)	10.62 PSF ☐ ; 12.70 PSF ☐ ; 12.85 PSF ☐
ALLOWABLE SOIL BEARING FOR FOUNDATIONS	VARIES - SEE FOUNDATION CHARTS
FLOOD DESIGN - DESIGN IS ASSUMED TO NOT BE IN FLOOD HAZARD AREA	
IF PROJECT IS LOCATED IN A FLOOD ZONE OTHERTHAN ZONE X, A LETTER STAMPED & SIGNED FROM A SOILS ENGINEER IS REQUIRED TO VALIDATE THE ALLOWABLE SOIL VALUES SPECIFIED.	

STRUCTURAL SEPARATION

ALL DEFLECTIONS SHOWN ALSO INCLUDE THE P-DELTA ROTATION PER IR PC-7

SEPARATION IS THE SUM OF 2 OF THESE SELECTED DEFLECCTION

DEFLECTIONS ARE FOR (1) STRUCTURE

SOIL CLASSES PER CBC TABLE 1806A.2

MAXIMUM DRIFT δ_{max} SIDE COLUMNS	Soil Class 5	Soil Class 4	Soil Class 3
20' WIDE (8' EAVE HT, 10' EAVE HEIGHT, 12' EAVE HT) (INCHES)	[ ] 2.40	[ ] 2.55	[ ] 2.65
30' WIDE (8' EAVE HT, 10' EAVE HEIGHT, 12' EAVE HT) (INCHES)	[ ] 2.15	[ ] 2.30	[ ] 2.40
40' WIDE (8' EAVE + T, 10' EAVE HEIGHT, 12' EAVE HT) (INCHES)	[ ] 2.20	[ ] 2.20	[ ] 2.30
MINIMUM SEPARATION ($\delta_m = C_d\ \delta_{max}$) C_d = 1.25			
20' WIDE (8' EAVE HT, 10' EAVE HEIGHT, 12' EAVE HT) (INCHES)	[ ] 3.00	[ ] 3.19	[ ] 3.31
30' WIDE (8' EAVE HT, 10' EAVE HEIGHT, 12' EAVE HT) (INCHES)	[ ] 2.69	[ ] 2.88	[ ] 3.00
40' WIDE (8' EAVE HT, 10' EAVE HEIGHT, 12' EAVE HT) (INCHES)	[ ] 2.75	[ ] 2.75	[ ] 2.88

MAXIMUM DRIFT δ_{max} END COLUMNS	Soil Class 5	Soil Class 4	Soil Class 3
20' WIDE (8' EAVE HT, 10' EAVE HEIGHT, 12' EAVE HT) (INCHES)	[ ] 2.40	[ ] 2.55	[ ] 2.65
30' WIDE (8' EAVE HT, 10' EAVE HEIGHT, 12' EAVE HT) (INCHES)	[ ] 2.15	[ ] 2.30	[ ] 2.40
40' WIDE (8' EAVE HT, 10' EAVE HEIGHT, 12' EAVE HT) (INCHES)	[ ] 2.20	[ ] 2.20	[ ] 2.30
MINIMUM SEPARATION ($\delta_m = C_d\ \delta_{max}$) C_d = 1.25			
20' WIDE (8' EAVE HT, 10' EAVE HEIGHT, 12' EAVE HT) (INCHES)	[ ] 3.00	[ ] 3.19	[ ] 3.31
30' WIDE (8' EAVE HT, 10' EAVE HEIGHT, 12' EAVE HT) (INCHES)	[ ] 2.69	[ ] 2.88	[ ] 3.00
40' WIDE (8' EAVE HT, 10' EAVE HEIGHT, 12' EAVE HT) (INCHES)	[ ] 2.75	[ ] 2.75	[ ] 2.88

INSTRUCTIONS FOR ARCHITECTS SUBMITTING THESE PRE-CHECKED DRAWINGS TO DSA:

BEFORE SUBMITTING THESE PRE-CHECKED DRAWINGS FOR YOUR PROJECT, FOLLOW THE STEPS BELOW TO PROPERLY DEFINE THE APPROVED OPTIONS:

STEP 1: SELECT FRAME DIMENSIONS FOR YOUR PROJECT
- GABLE STRUCTURES UP TO 20' WIDE USE THE "RG 20" BASE FRAME
- GABLE STRUCTURES UP TO 30' WIDE USE THE "RG 30" BASE FRAME
- GABLE STRUCTURES UP TO 40' WIDE USE THE "RG 40" BASE FRAME
- MAXIMUM WIDTH IS 40' (SEE "ARCHITECTURAL VIEWS" SHEET FOR REFERENCE)
- THE 24', 44', 64', 84' AND 104' LENGTHS ARE SUGGESTED BECAUSE THEY ARE THE MOST COMMON (20' BAYS ARE THE MOST ECONOMICAL)
- FRAME LENGTHS ASSUME 2' OVERHANGS (UNO BY ARCHITECT - 2' MAX DIMENSION)

STEP 1	FRAME DIMENSIONS				
		SUGGESTED			OTHER
	FRAME WIDTH	[ ] 20'	[ ] 30'	[ ] 40'	[ ] (40' MAX)
	FRAME LENGTH	[ ] 44'	[ ] 64'	[ ] 84'	[ ] 104' ; [ ] (NO MAX)

STEP 2: SELECT ROOF DECK FOR YOUR PROJECT
- "M" REPRESENTS McELROY METAL "MULTI-RIB" ROOF PANEL
- "G" REPRESENTS McELROY METAL "MEGA-RIB" ROOF PANEL
- "S" REPRESENTS McELROY METAL "MEDALLION-LOK" 16" STANDING SEAM ROOF PANEL

STEP 2	ROOF PANEL	
	ROOF PANEL TYPE	[ ] M [ ] G [ ] S

STEP 3: IDENTIFY THE Ss ACCELERATION (g) FOR YOUR PROJECT
- Ss VALUE DETERMINES THE REQUIRED SEISMIC DESIGN FORCES
- Ss VAULE DEPENDS ON THE PROJECTS GEOGRAPHICAL LOCATION (VALUES RANGE FROM 0.00 TO 3.73)
  - FIND Ss VALUES FOR YOUR PROJECT ON THE USGS WEBSITE (SEARCH INTERNET FOR "USGS SEISMIC DESIGN MAPS")

STEP 3	PROJECT SITE - Ss ACCELERATION (g)

STEP 4: IDENTIFY THE Ss REGION FOR YOUR PROJECT
- THE REGIONS ARE DEPENDANT ON THE Ss VALUE DETERMINED IN STEP 3
- THE Ss REGION DICTATES THE MAXIMUM DEAD LOAD PERMITTED ON THE FRAME

STEP 4	Ss REGION		
		Ss REGIONS	MAX DEAD LOAD
	DESCRIPTION	0 < Ss <= 2.14	5 PSF
		2.14 < Ss <= 2.50	5 PSF
		2.50 < Ss <= 2.60	5 PSF

STEP 5: IDENTIFY THE ROOF DEAD LOAD FOR YOUR PROJECT
- THE ROOF DECK DEAD LOAD WILL ALWAYS BE INCLUDED
- THE COLLATERAL LOAD REPRESENTS ADDITIONAL LOAD THAT CAN BE SUPPORTED BY THE FRAME
- BE SURE THE TOTAL ROOF DEAD LOAD FOR YOUR PROJECT IS LESS THAN OR EQUAL TO THE MAX DEAD LOAD SHOWN IN STEP 4 FOR YOUR Ss VALUE
- Sds VALUE USED IN CALCULATION IS THE CAPPED Sds (SEE DESIGN CRITERIA)

STEP 5	TOTAL ROOF DEAD LOAD		
		DEAD LOAD	EXAMPLES
	ROOF DECK	_____ PSF	M=1.1PSF; G=1.2PSF ;S=1.3PSF (SEE STEP 2)
	COLLATERAL	_____ PSF	LIGHTNING,FIRE SUPPRESSION,SOLAR PANELS,ETC
	TOTAL	_____ PSF	ADD ROOF DECK AND COLLATERAL LOADS (MAX 5 PSF)

STEP 6: IDENTIFY THE FOUNDATION REQUIREMENTS FOR YOUR PROJECT
- IDENTIFY SOIL CLASS FOR PROJECT SITE PER SITE SPECIFIC SOIL CONDITIONS
- USE THIS TO SELECT CORRECT FOUNDATION SIZE ON FOUNDATION SHEET

AREA OVER 4000 SQFT REQUIRES A GEOHAZARD REPORT

STEP 6	FOUNDATION REQUIREMENTS		
	[ ] GEOTECHNICAL REPORT NOT REQUIRED	[ ] GEOTECHNICAL REPORT REQUIRED	
	SOIL CLASS 5 (BEARING) 1500 PSF [ ]	SOIL CLASS 4 (BEARING) 2000 PSF [ ]	SOIL CLASS 3 (BEARING) 3000 PSF [ ]
	SOIL CLASS 5 (LATERAL BEARING) 200 PSF/FT	SOIL CLASS 5 (LATERAL BEARING) 300 PSF/FT	SOIL CLASS 5 (LATERAL BEARING) 400 PSF/FT
	COHESION 130 PSF	FRICTION COEFFICIENT 0.25	FRICTION COEFFICIENT 0.30

STEP 7: SELECT MISCELLANEOUS OPTIONS FOR YOUR PROJECT
- MAXIMUM CLEAR HEIGHT IS 12'-0"; (SEE "ARCHITECTURAL VIEWS" SHEET FOR REFERENCE)
- MARK UP PC DRAWINGS WITH SIZE AND LOCATION OF CUTOUTS BEFORE SUBMITTING TO DSA

STEP 7	MISCELLANEOUS	
		DESIGN OPTIONS
	CLEAR HEIGHT	[ ] 8' [ ] 10' [ ] 12' ; [ ] ' (12" MAX)
	ELECTRICAL CUTOUTS	[ ] YES ; [ ] NO
	GUTTERS	[ ] YES ; [ ] NO

STEP 8: SELECT APPLICABLE SHEET INDEX FOR YOUR PROJECT
- REFERENCE THE BASE FRAME (STEP 1) AND THE ROOF PANEL TYPE (STEP 2)
- IDENTIFY THE APPLICABLE SHEET INDEX

STEP 8	SHEET INDEX										
	BASE FRAME	RG 20			RG 30			RG 40			
	ROOF PANEL TYPE	M	G	S	M	G	S	M	G	S	
	SELECT ONE	[ ]	[ ]	[ ]	[ ]	[ ]	[ ]	[ ]	[ ]	[ ]	
	GENERAL NOTES	LS1.0	LS1.0	LS1.0	LS1.0	LS1.0	LS1.0	LS1.0	LS1.0	LS1.0	
	FOUNDATION PLAN	LS2.0	LS2.0	LS2.0	LS3.0	LS3.0	LS3.0	LS4.0	LS4.0	LS4.0	
	FRAMING PLAN	LS2.1	LS2.1	LS2.1	LS3.1	LS3.1	LS3.1	LS4.1	LS4.1	LS4.1	
	FRAME CONNECTION DETAILS	LS2.1	LS2.1	LS2.1	LS3.1	LS3.1	LS3.1	LS4.1	LS4.1	LS4.1	
	ROOFING LAYOUT & DETAILS	LS2.2	LS2.3	LS2.4	LS3.2	LS3.3	LS3.4	LS4.2	LS4.3	LS4.4	
	MISC DESIGN OPTIONS	LS5.0	LS5.0	LS5.0	LS5.0	LS5.0	LS5.0	LS5.0	LS5.0	LS5.0	
	DSA 103 EXAMPLE	LS1.2 LS1.3	LS1.2 LS1.3	LS1.2 LS1.3	LS1.2 LS1.3	LS1.2 LS1.3	LS1.2 LS1.3	LS1.2 LS1.3	LS1.2 LS1.3	LS1.2 LS1.3	
	-										
	-										

STEP 9: INCLUDE APPLICABLE SHEETS WITH YOUR DSA SUBMITTAL
- INCLUDE 'MISC DESIGN OPTIONS' SHEET FOR PROJECTS WITHOUT ELECTRICAL CUTOUTS OR GUTTERS

STEP 10: IDENTIFY PROJECT NAME AND LOCATION

PROJECT NAME:	SCHOOL DISTRICT:

STEP 11: CROSS OUT EXAMPLE 103 FORMS & INCORPORATE REQUIRED SPECIAL INSPECTIONS 103 FORMS THAT ARE PROJECT SPECIFIC

SITE SPECIFIC PARAMETERS

INSTRUCTIONS: DESIGN PROFESSIONAL SHALL CHECK THE APPROPRIATE SELECTION BOXES BELOW AND ENTER THE DESIGN PARAMETERS APPLICABLE TO THE SPECIFIC PROJECT SITE

SNOW
pg = _____psf
Pf = _____psf
Ce = _____ psf

WIND
V = _____ mph < XX mph
kzt = _____ < 1
EXPOSURE: C☐ D☐

SELECT ONE

SIESMIC
☐ DESIGN BASED ON SITE CLASS D
NO GEOTECHNICAL INVESTIGATION REQUIRED
Ss = _____ Fa = 1.2

☐ DESIGN BASED ON SITE CLASS DETERMINED PER CHAPTER 20 OF ASCE 7-16
GEOTECHNICAL INVESTIGATION PROVIDED
SITE CLASS: C ☐ D☐ E☐
Ss = _____ Fa = _____PER ASCE 7-16 SUPPL 3, TABLE 11.4-1

☐ DESIGN BASED ON SITE SPECIFIC GROUND MOTION HAZARD ANALYSIS PER CHAPTER 21 OF ASCE 7-16
SHORT-PERIOD DESIGN SPECTRAL RESPONSE PARAMETER, Sds, SHALL BE AS SPECIFIED IN GEOTECHNICAL INVESTIGATION
AREA OVER 4000 SQFT REQUIRES A GEOHAZARD REPORT
COS APPROVAL REQUIRED
NOT ELEGIBLE FOR OTC REVIEW
SITE CLASS: C☐ D☐ E☐

Sds = Fa Ss = _____

☐ SITE CLASS:C or D: 0.7 x Sds* = 0.7 x _____= _____ < X.XX
☐ SITE CLASS E: Sds = _____ < X.XX
Cs= X.XXX USED IN DESIGN
SIESMIC DESIGN CATEGORY D ☐ E ☐
*SITE SPECIFIC Sds VALUE BEFORE APPLYING REDUCTION ALLOWED BY ASCE 7 SECTION 12.8.1.3

ABBREVIATIONS:

ACI	AMERICAN CONCRETE INSTITUTE	MPH	MILES PER HOUR
AISC	AMERICAN INSTITUTE OF STEEL CONSTRUCTION	M	MULTI-RIB ROOF PANEL (MCELROY)
ASM	ASSEMBLY (INTERNAL REFERENCE)	NTS	NOT TO SCALE
ASTM	AMERICAN SOCIETY FOR TESTING AND MAT'LS	NO	NUMBER
AWS	AMERICAN WELDING SOCIETY	OC	ON CENTER
CBC	CALIFORNIA BUILDING CODE	OSHA	OCCUPATIONAL HEALTH AND SAFETY ADMIN
CJP	COMPLETE JOINT PENETRATION	PCF	POUNDS PER CUBIC FOOT
CLR	CLEAR	PJ	PRETENSIONED JOINT
DEG	DEGREE	PLCS	PLACES
DIA	DIAMETER	PLT	PLATE
DIM	DIMENSION	PSF	POUNDS PER SQUARE FOOT
DSA	DIVISION OF THE STATE ARCHITECT	PSI	POUNDS PER SQUARE INCH
EQ	EQUAL	QTY	QUANTITY
FT	FEET	REF	REFERENCE
GA	GAGE	SQ	SQUARE
IN	INCHES	SS	STANDING SEAM ROOF PANEL (MCELROY)
KSI	KIPS PER SQUARE INCH	TYP	TYPICAL
MAX	MAXIMUM	UNO	UNLESS NOTED OTHERWISE
MIN	MINIMUM	USGS	U.S. GEOLOGICAL SURVEY
MISC	MISCELLANEOUS	W/	WITH

ARCHITECTURAL REQUIREMENTS

DESCRIPTION	DESIGN VAULES
TYPE OF CONSTRUCTION	II-B
OCCUPANCY CLASSIFICATION	A-3
NUMBER OF STORIES	1
FIRE SPRINKLER SYSTEM	NOT BY ICON/WEIGHT NOT INCLUDED IN DESIGN
MOST COMMON RG20 MIN/MAX SQ.FT (SEE STEP 1)	480/2,080
MOST COMMON RG30 MIN/MAX SQ.FT (SEE STEP 1)	720/3,120
MOST COMMON RG40 MIN/MAX SQ.FT (SEE STEP 1)	960/4,160

AREA OVER 4000 SQFT REQUIRES GEOHAZARD REPORT
ALLOWABLE AREA FOR II-B / A-3 IS 9500 SQ.FT

RELATED BUILDING CODES AND STANDARDS

TITLE 24 CODES:

2022 CALIFORNIA ADMINISTRATIVE CODE (CAC).....(PART 1, TITLE 24, CCR)
2022 CALIFORNIA BUILDING CODE (CBC),PART 2, TITLE 24 CCR
2022 CALIFORNIA ELECTRICAL CODE.....(PART 3, TITLE 24, CCR)
2022 CALIFORNIA MECHANICAL CODE (CMC).....(PART 4, TITLE 24, CCR)
2022 CALIFORNIA PLUMBING CODE (CPC).....(PART 5, TITLE 24, CCR)
2022 CALIFORNIA ENERGY CODE.....(PART 6, TITLE 24, CCR)
2022 CALIFORNIA FIRE CODE (CFC) .....(PART 9, TITLE 24, CCR)
2022 CALIFORNIA GREEN BUILDING STANDARDS CODE.....(PART 11, TITLE 24, CCR)
2022 CALIFORNIA REFERENCE STANDARDS CODE.....(PART 12, TITLE 24, CCR)
TITLE 19 CCR, PUBLIC SAFETY, STATE FIRE MARSHAL REGULATIONS

REFERENCE CODE SECTIONS FOR APPLICABLE STANDARDS:
2022 CBC, CHAPTER 35
2022 CFC, CHAPTER 80

SCOPE OF WORK NARRATIVE

THESE DRAWINGS ILLUSTRATE THE FABRICATION AND INSTALLATION REQUIREMENTS FOR A FREE-STANDING PREFABRICATED STEEL SHADE STRUCTURE. THE ENTIRE STRUCTURAL SYSTEM IS COMPRISED OF HOLLOW STRUCTURAL STEEL MEMBERS SUPPORTED BY CONCRETE FOUNDATIONS. THE FLEXIBILITY INCLUDED HEREIN ALLOWS THE STRUCTURE TO COMPLY WITH A WIDE VARIETY OF PROJECT SITES AND LOADING REQUIREMENTS.

PRE-CHECK (PC) DOCUMENT
Code: 2022 CBC
A separate project application for construction is required.

IDENTIFICATION STAMP
DIV. OF THE STATE ARCHITECT
APP: 02-121754 INC:
REVIEWED FOR
SS ☐ FLS ☐ ACS ☑
DATE: 02/21/2024

ICON STD	RG/DSA-PC
DRAWN BY	JD
DATE	3/21/2023
REV	
REV DATE	

JRMA
ARCHITECTS ENGINEERS
2700 SATURN ST1 BREA, CA 92821
T.714.524.1870 F. 714.524.1875
WWW.JRMA.COM

REGISTERED PROFESSIONAL ENGINEER
JAMES D. ROSE
No. 30398
STRUCTURAL
STATE OF CALIFORNIA
Aug 31, 2023

APPROVED
DIV. OF THE STATE ARCHITECT
APP: 04-122188 PC
REVIEWED FOR
SS ☑ FLS ☑ ACS ☑ CG ☐
DATE: 09/21/2023

GENERAL INFO

ICON Shelter Systems Inc
DISTINCTIVE STEEL SHELTERS
WWW.ICONSHELTERS.COM

1455 LINCOLN AVE
HOLLAND MI, 49423
616.396.0919
800.748.0985
616.396.0944 FX

LS1.0

PRINTED ON :

GENERAL:

1. GENERAL NOTES AND TYPICAL DETAILS SHALL APPLY TO ALL PARTS OF THE JOB EXCEPT WHERE THEY MAY CONFLICT WITH DETAILS AND NOTES ON OTHER SHEETS. WHERE CONDITIONS ARE NOT SPECIFICALLY INDICATED BUT ARE OF SIMILAR CHARACTER TO DETAILS SHOWN, SIMILAR DETAILS OF CONSTRUCTION SHALL BE USED SUBJECT TO REVIEW BY THE STRUCTURAL ENGINEER FOR THIS PROJECT.
2. WORK SHALL CONFORM TO THE REQUIREMENTS, AS AMENDED TO DATE, OF THE LATEST ADOPTED EDITION OF THE CBC, C.A.C. TITLE 24, AND ALL STATE AND FEDERAL REGULATIONS.
3. OMISSIONS OR CONFLICTS BETWEEN THE VARIOUS ELEMENTS OF THE WORKING DRAWINGS AND/OR SPECIFICATIONS SHALL BE BROUGHT TO THE ATTENTION OF THE STRUCTURAL ENGINEER FOR THIS PROJECT PRIOR TO PROCEEDING WITH ANY WORK INVOLVED.
4. THE CONTRACTOR SHALL BE RESPONSIBLE FOR COORDINATING THE WORK OF ALL TRADES AND SHALL CHECK ALL DIMENSIONS, ALL DISCREPANCIES SHALL BE CALLED TO THE ATTENTION OF THE STRUCTURAL ENGINEER FOR THIS PROJECT AND BE RESOLVED BEFORE PROCEEDING WITH THE WORK.
5. THESE CONSTRUCTION DRAWINGS AND SPECIFICATIONS REPRESENT THE FINISHED STRUCTURE AND DO NOT INDICATE THE METHOD OF CONSTRUCTION. THE CONTRACTOR SHALL SUPERVISE AND DIRECT THE WORK AND SHALL BE SOLELY RESPONSIBLE FOR CONSTRUCTION MEANS, METHODS, TECHNIQUES, SEQUENCES AND PROCEDURES, INCLUDING, BUT NOT LIMITED TO, BRACING, TEMPORARY SUPPORTS, AND SHORING. OBSERVATION VISIT TO THE SITE BY FIELD REPRESENTATIVES OF THE ARCHITECT/ENGINEER SHALL NOT INCLUDE INSPECTIONS OF THE PROTECTIVE MEASURES OR THE CONSTRUCTION PROCEDURES. ANY SUPPORT SERVICES PERFORMED BY THE ARCHITECT/ENGINEER DURING THE CONSTRUCTION SHALL BE DISTINGUISHED FROM CONSTRUCTION AND DETAILED INSPECTION SERVICES WHICH ARE FURNISHED BY OTHERS. THESE SUPPORT SERVICES PERFORMED BY THE ARCHITECT/ENGINEER, WHETHER OF MATERIAL OR WORK, ARE FOR THE PURPOSE OF ASSISTING IN QUALITY CONTROL AND IN ACHIEVING CONFORMANCE WITH CONTRACT DOCUMENTS, BUT DO NOT GUARANTEE CONSTRUCTION.
6. ASTM DESIGNATIONS AND ALL STANDARDS REFER TO THE LATEST AMENDMENTS, EXCEPT AS AMENDED BY CBC CHAPTER 35.
7. CONFORM TO APPLICABLE CAL/OSHA CONSTRUCTION SAFETY REGULATIONS FOR ALL WORK PERFORMED DURING CONSTRUCTION. JOB SITE SAFETY IS STRICTLY THE RESPONSIBILITY OF THE CONTRACTOR AND NOT THE ARCHITECT/ENGINEER OR OWNER.
8. THE ENGINEER AND THEIR CONSULTANTS SHALL HAVE NO RESPONSIBILITY FOR THE DISCOVERY, HANDLING, REMOVAL OR DISPOSAL OF HAZARDOUS MATERIALS AT THE PROJECT SITE, INCLUDING BUT NOT LIMITED TO ASBESTOS, ASBESTOS PRODUCTS, POLYCHLORINATED BIPHENYL (PCB) OR OTHER TOXIC SUBSTANCES.
9. SHOULD ANY CONDITIONS DEVELOP NOT COVERED BY THE CONTRACT DOCUMENTS, OR IF A CHANGE IN THE SCOPE OF WORK IS PROPOSED, A CONSTRUCTION CHANGE DOCUMENT DETAILING AND SPECIFYING THE REQUIRED CHANGE(S) SHALL BE SUBMITTED TO AND APPROVED BY DSA BEFORE PROCEEDING WITH THE WORK.
10. THE SCHOOL DISTRICT INSPECTOR ON RECORD SHALL INSPECT AND APPROVE THE ERECTED FRAME PRIOR TO ROOF INSTALLATION.
11. SEE REQUIREMENTS FOR LOCATION IN ANY FIRE HAZARD SEVERITY ZONE FOR WILDLAND URBAN INTERFACE AREAS (WUI) AS SPECIFIED IN THE APPLICABLE VERSION OF THE CALIFORNIA BUILDING CODE. PROVIDE PROTECTION AND DETAILS OF ALL AREAS COMPLYING WITH THE WUI REQUIREMENTS. SEE CBC CHAPTER 7A FOR REQUIREMENTS
12. LOCATING THIS STRUCTURE CLOSER THAN 20 FEET TO OTHER STRUCTURES MAY AFFECT THE ALLOWABLE AREA FOR THE EXISTING CONSTRUCTION PER THE APPLICABLE VERSION OF THE CALIFORNIA BUILDING CODE.
13. VIEWS AND DETAILS ARE NOT DRAWN TO SCALE (UNLESS NOTED OTHERWISE). DO NOT SCALE THESE DRAWINGS.

STRUCTURAL AND MISCELLANEOUS STEEL:

1. ALL STRUCTURAL STEEL SHALL BE DETAILED, FABRICATED AND ERECTED IN ACCORDANCE WITH THE AMERICAN INSTITUE OF STEEL CONSTRUCTION (AISC) SPECIFICATION MANUAL REFERENCED BY THE LATEST EDITION OF THE CALIFORNIA BUILDING CODE.
2. PIPE SECTIONS SHALL CONFORM TO ASTM A53, Fy = 35 KSI, GRADE B OR A501 UNLESS NOTED OTHERWISE.
3. STRUCTURAL TUBING (HSS SHAPES) SHALL CONFORM TO ASTM A-500, GRADE B (OR C), Fy = 46 KSI. MIN.
4. IF MATERIAL AVAILABILITY IS LIMITED, MEMBER THICKNESS CAN BE INCREASED BEYOND WHAT IS SHOWN IN THESE DRAWINGS (MAXIMUM INCREASE OF 1/8").
5. ALL CHANNELS, ANGLES, AND MISC. STEEL SHALL CONFORM TO ASTM A-36, Fy = 36 KSI.
6. ALL PLATE STEEL SHALL CONFORM TO ASTM A-572, Fy= 50 KSI.
7. ALL COLD FORM STEEL SHALL CONFORM TO ASTM A-653, CS = TYPE B, Fy = 50 KSI Fu = 65 KSI
8. STRUCTURAL STEEL AND DECK SHALL BE IDENTIFIED FOR CONFORMITY PER CBC 2202A.1.
9. ALL ROOF DECKS SHALL HAVE KYNAR 500 METAL COATING.
10. ALL ROOF DECKS SHALL CONFORM TO ASTM A-792, Fy = 50 KSI.
11. ALL BASE CONNECTIONS ARE A PART OF THE LATERAL FORCE RESISTING SYSTEM

NOTICE OF DISCLAIMER FOR STRUCTURAL ENGINEERING RESPONSIBILITY

1. PER TITLE 24, PART 1, SECTION 4-316(e) OF THE CALIFORNIA CODE OF REGULATIONS, THIS NOTICE SHALL BE GIVEN TO DSA PRIOR TO THE APPROVAL OF PLANS AND SPECIFICATIONS.
2. FOR THE SITE SPECIFIC PROJECT, J. R. MILLER & ASSOCIATES IS NOT THE DESIGN PROFESSIONAL IN GENERAL RESPONSIBLE CHARGE.
3. FOR THE SITE SPECIFIC PROJECT, J.R. MILLER & ASSOCIATES' RESPONSIBILITY IS LIMITED TO THE PREPARATION OF THE PLANS AND SPECIFICATIONS FOR THE SHELTERS OF THIS PC ONLY.
4. STRUCTURAL OBSERVATION OF CONSTRUCTION IS SPECIFICALLY EXCLUDED FROM J.R. MILLER & ASSOCIATES' RESPONSIBILITY FOR THE SITE SPECIFIC PROJECT.
5. ALL CONSTRUCTION ACTIVITIES RELATED TO STRUCTURAL ENGINEERING SHALL BE DELEGATED TO A QUALIFIED ENGINEER BY THE DESIGN PROFESSIONAL IN GENERAL RESPONSIBLE CHARGE. THESE ACTIVITIES INCLUDE, BUT ARE NOT LIMITED TO, STRUCTURAL OBSERVATION OF CONSTRUCTION, REVIEW OF INSPECTION REPORTS, AND SIGNING OFF OF THE VERIFIED REPORT FOR COMPLETED WORK.
6. J.R. MILLER & ASSOCIATES WILL BE RESPONSIBLE FOR RESPONDING TO QUESTIONS PERTAINING TO THE PLANS AND SPECIFICATIONS FOR THE SHELTERS OF THIS PC WHICH ARISE DURING PLAN REVIEW AND CONSTRUCTION.

CONSTRUCTION NOTES

1. A DSA-CERTIFIED CLASS 3 (MINIMUM) PROJECT INSPECTOR IS REQUIRED FOR THIS PROJECT.
2. CHANGES TO THE APPROVED DRAWINGS AND SPECIFICATIONS SHALL BE MADE BY ADDENDA OR CONSTRUCTION CHANGE DOCUMENT (CCD) APPROVED BY DSA, AS REQUIRED BY SECTION 4-338, PART 1, TITLE 24, CCR.
3. A "DSA CERTIFIED" PROJECT INSPECTOR EMPLOYED BY THE DISTRICT (OWNER) AND APPROVED BY DSA SHALL PROVIDE CONTINUOUS INSPECTION OF WORK, THE DUTIES OF THE INSPECTOR ARE DEFINED IN SECTION 4-342, PART 1, TITLE 24, CCR.
4. A DSA ACCEPTED TESTING LABORATORY DIRECTLY EMPLOYED BY THE DISTRICT (OWNER) SHALL CONDUCT ALL THE REQUIRED TESTS AND INSPECTIONS FOR THE PROJECT.
5. THE INTENT OF THESE DRAWINGS AND SPECIFICATIONS ARE THAT ALL THE WORK OF THE ALTERATION, REHABILITATION OR RECONSTRUCTION IS TO BE IN ACCORDANCE WITH TITLE 24, CCR. SHOULD ANY EXISTING CONDITIONS SUCH AS DETERIORATION OR NON-COMPLYING CONSTRUCTION BE DISCOVERED WHICH IS NOT COVERED BY THE CONTRACT DOCUMENTS WHEREIN THE FINISHED WORK WILL NOT COMPLY WITH TITLE 24, CCR, A CONSTRUCTION CHANGE DOCUMENT (CCD), OR A SEPARATE SET OF PLANS AND SPECIFICATIONS, DETAILING AND SPECIFYING THE REQUIRED WORK SHALL BE SUBMITTED TO AND APPROVED BY DSA BEFORE PROCEEDING WITH THE WORK, (SECTION 4-317(c), PART 1, TITLE 24, CCR)
6. GRADING PLANS, DRAINAGE IMPROVEMENTS, ROAD AND ACCESS REQUIREMENTS AND ENVIRONMENTAL HEALTH CONSIDERATIONS SHALL COMPLY WITH ALL LOCAL ORDINANCES

WELDING:

1. ALL WELDING SHALL COMPLY WITH AWS D1.1 SPECIFICATIONS AND SHALL BE DONE BY AWS QUALIFIED WELDERS CERTIFIED FOR THE TYPE OF WELDING TO BE PERFORMED AS REQUIRED BY DSA.
2. ALL WELDING SHALL BE DONE BY GAS METAL ARC PROCESS WITH E70XX ELECTRODES. FLUX CORE ARC WELD SHALL CONFORM TO CHARPY NOTCH TOUGHNESS RATING OF 20 ft-lb @ (0° F).
3. ALL WELDING SHALL BE DONE IN THE SHOP WITH REQUIRED INSPECTION, PRE-APPROVED BY DSA, TO ENSURE PROPER MATERIAL ID AND WELDING.
4. WELD FILLER METAL MANUFACTURER SHALL PROVIDE WRITTEN CERTIFICATION OF COMPLIANCE WITH CODE AND SPECIFICATIONS.

BOLTING:

1. ALL BOLTS SHOWN ON THESE DRAWINGS ARE HOT DIPPED GALVANIZED ASTM F3125 GRADE A325 HIGH STRENGTH BOLTS (UNO), WITH THE NUTS CONFORMING TO HOT DIPPED GALVANIZED ASTM A-563 GRADE DH.
2. HIGH STRENGTH BOLTS SHALL BE VERIFIED AND INSPECTED PER CBC 1705A2.1.
3. BEFORE ERECTING THE FRAME, VERIFY ALL BOLTS AND NUTS ARE CLEAN OF DEBRIS AND BURRS – INCLUDING THE HARDWARE ALREADY FASTENED INSIDE THE MEMBERS. CHASING SOME OF THE BOLTS AND NUTS MAY BE REQUIRED.
4. HARDENED STEEL WASHERS SHALL CONFORM TO ASTM F-436.
5. THE BOLTING INSTALLATION REQUIREMENTS OUTLINED BELOW ARE CRITICAL TO THE STRUCTURE'S DESIGN AND PERFORMANCE. THE INSTALLER IS REQUIRED TO COORDINATE THIS PHASE OF CONSTRUCTION WITH THE SPECIAL BOLTING INSPECTOR AND THE INSPECTOR OF RECORD PRIOR TO THE ERECTION OF THE FRAME BE INSTALLED AND INSPECTED PER THE APPLICABLE VERSION OF AISC'S USING HIGH-STRENGTH BOLTS", CBC 1705A.2.1; AISC 341-16 J7; AISC 360-16 N5.6.

A) PRETENSIONED JOINTS MUST BE INSTALLED AND INSPECTED TO MEET ONE OF THE FOLLOWING REQUIREMENTS:
1. TURN-OF-NUT PRETENSIONING: PER SECTION 8.2.1 OF THE *SPECIFICATION FOR STRUCTURAL JOINTS USING HIGH STRENGTH BOLTS* , WASHERS ARE NOT REQUIRED FOR THIS METHOD, THE NUT OR HEAD SHALL BE ROTATED AS SPECIFIED IN TABLE 8.2. THE PART NOT TURNED SHALL BE PREVENTED FROM ROTATING.
2. CALIBRATED WRENCH: PER THE *SPECIFICATION FOR STRUCTURAL JOINTS USING HIGH STRENGTH BOLTS*, WASHERS ARE REQUIRED (NOT SUPPLIED BY ICON) THESE SHALL BE INSTALLED PER THE INSTALLATION TORQUE DETERMINED IN THE PRE-INSTALLATION VERIFICATION OF THE FASTENER ASSEMBLY PER SECTION 7. THE PART NOT TURNED SHALL BE PREVENTED FROM ROTATING.
3. IDENTIFIED ON THE FRAME CONNECTION DETAILS WITH "PT REQUIRED"

B) ALL OTHER JOINTS MUST BE INSTALLED AND INSPECTED TO MEET THE REQUIREMENTS OF THE SNUG-TIGHTENED JOINTS. SNUG TIGHT CONDITION EXISTS WHEN ALL PLIES IN A CONNECTION HAVE BEEN PULLED INTO FIRM CONTACT BY THE BOLTS IN THE JOINT AND ALL OF THE BOLTS IN THE JOINT HAVE BEEN TIGHTENED SUFFICIENTLY TO PREVENT REMOVAL OF THE NUTS WITHOUT THE USE OF A WRENCH.

FOUNDATIONS:

1. ALLOWABLE SOIL PRESSURES ASSUME CLASS 5 SOIL CLASSIFICATION PER CBC TABLE 1806A, UNLESS NOTED OTHERWISE. PASSIVE PRESSURE IS ASSUMED TO START 12" BELOW TOP OF FOOTING.
2. PER CBC SECTION 1803A.2, GEOTECHNICAL REPORTS ARE NOT REQUIRED FOR ONE-STORY LIGHT-STEEL FRAME BUILDINGS OF TYPE II CONSTRUCTION AND 4,000 SQUARE FOOT OR LESS IN FLOOR AREA AND NOT LOCATED WITHIN EARTHQUAKE FAULT ZONESOR SIESMIC HAZARD ZONES AS SHOWN ON THE MOST RECENT MAPS PUBLISHED BY THE CGS. ALLOWABLE FOUNDATION AND LATERAL SOIL PRESSURE VALUES MAY BE DETERMINED FROM TABLE 1806A.2.
3. FILL AND BACKFILL SHALL BE COMPACTED TO 95% OF MAX. DENSITY IN ACCORDANCE WITH ASTM TEST METHOD D-1557 OR AS RECOMMENDED BY THE GEO-TECH ENGINEER. FLOODING NOT PERMITTED.
4. THE CONTRACTOR SHALL BE RESPONSIBLE FOR ALL SHORING, ETC. NECESSARY TO SUPPORT CUT AND/OR FILL BANKS DURING EXCAVATION, AND FORMING AND PLACEMENT OF CONCRETE.
5. MINIMUM SETBACK FROM TOE OF SLOPE ON AN ASCENDING SLOPE SHALL BE 15 FEET AND MINIMUM SETBACK FROM TOE OF SLOPE ON A DESCENDING SLOPE SHALL BE 40 FEET
6. PER CBC SECTION 1803A.6, GEOHAZARD REPORTS ARE NOT REQUIRED FOR ONE-STORY LIGHT-STEEL FRAME BUILDINGS OF TYPE II CONSTRUCTION AND 4,000 SQUARE FOOT OR LESS IN FLOOR AREA AND NOT LOCATED WITHIN EARTHQUAKE FAULT ZONESOR SIESMIC HAZARD ZONES AS SHOWN ON THE MOST RECENT MAPS PUBLISHED BY THE CGS.
7. GEOHAZRD REPORTS ARE TO COMPLY WITH DSA IR A-4 PER IR-7 SECTION 1.8
8. SITE SPECIFIC GEOTECHNICAL REPORT IS REQUIRED AT THE TIME OF SITE APPLICATION IF USING OTHER THAN CLASS 5 SOIL, PER DSA IR PC-7
9. LATERAL BEARING HAS BEEN INCREASED PER CBC 1806A.3.4 FOR THE 1/2" DEFLECTION & HAS BEEN DESIGNED FOR P-DELTA EFFECTS. NO 1/3 INCREASE HAS BEEN APPLIED.
10. MINIMUM CLEARANCE BETWEEN PIERS SHALL BE 8'-0".

CONCRETE:

1. MIX DESIGN REQUIREMENTS: (NORMAL WEIGHT CONCRETE)

STRENGTH Pc (28 DAYS)	W/C RATIO (NON-AIR ENTRAINED)	W/C RATIO (AIR ENTRAINED)	SLUMP (±1")	UNIT WEIGHT (NORMAL WEIGHT)
5000 PSI	0.44	0.35	3"	150 PCF

2. CONCRETE MIX DESIGN PARAMETERS ARE GOOD FOR EXPOSURE CATEGORIES F0, F1 & F2. THE AIR ENTRAINMENT FOR THESE CATEGORIES SHALL BE AS FOLLOWS: F0=0, F1=4.5, F2=6
3. CHANGES TO THE MIX DESIGN MUST BE APPROVED BY THE ENGINEER OR ARCHITECT OF RECORD AND DSA.
4. AGGREGATES SHALL CONFORM TO THE ASTM C-33 WITH PROVEN SHRINKAGE CHARACTERISTICS OF LESS THAN 0.005. MAX AGGREGATE SIZE = 1".
5. CEMENT SHALL CONFORM TO ASTM C-150 (TYPE V) UNLESS NOTED OTHERWISE ON THE DRAWINGS.
6. CONCRETE SHALL BE MAINTAINED IN A MOIST CONDITION FOR A MINIMUM OF FIVE DAYS AFTER PLACEMENT. ALTERNATE METHODS WILL BE APPROVED IF SATISFACTORY PERFORMANCE CAN BE ASSURED.
7. CONCRETE SHALL NOT FREE FALL MORE THAN FIVE FEET.
8. CONCRETE DURABILITY SHALL BE PER CBC 1904A.1 ACI 318-19, CHAPTER 19.
9. CONCRETE SHALL BE TESTED PER CBC 1903A, TABLE 1705A.3. AND ACI 318-19, SECTION 26.12.
10. NO ADMIXTURE SHALL CONTAIN CALCIUM CHLORIDE.

REINFORCING STEEL:

1. REINFORCING STEEL SHALL BE DEFORMED STEEL CONFORMING TO THE REQUIREMENTS OF ASTM A-615, AS FOLLOWS:
   GR 60: (#4 BARS AND LARGER)
   GR 40: (#3 BARS)
2. DETAILING, FABRICATION, AND ERECTION OF REINFORCING BARS SHALL CONFORM TO THE ACI "MANUAL OF STANDARD PRACTICE FOR DETAILING REINFORCING CONCRETE STRUCTURES."
3. MIN. COVER FOR CAST-IN-PLACE CONCRETE SHALL BE AS FOLLOWS:
   A. CAST AGAINST EARTH .....3"
   B. CAST AGAINST FORM BELOW GRADE .....2"
   C. FORMED SLABS (#11 BAR & SMALLER).....3/4"
   D. SLABS ON GRADE (FROM TOP OF SLAB).....1"
4. BARS SHALL BE CLEAN OF RUST, GREASE OR OTHER MATERIAL LIKELY TO IMPAIR BOND. BENDS SHALL BE MADE COLD.
5. REINFORCING SHALL BE LAP SPLICED PER ACI 318-19, SECTION 25.5.
6. PRIOR TO PLACING OF CONCRETE, REINFORCING STEEL AND EMBEDDED ITEMS SHALL BE WELL SECURED IN POSITION.
7. WELDING OF REINFORCING IS NOT ALLOWED.
8. REINFORCING STEEL SHALL BE INSPECTED PER CBC 1705A.3.

POWDER-COAT FINISH SYSTEM:

ALL BUILDINGS THAT HAVE A POWDER-COATED FINISH SHALL MEET THE FOLLOWING SPECIFICATIONS:

1. THE STEEL FRAME (HSS SECTIONS, COLD FORMED & PLATE STEEL) SHALL BE SHOT-BLASTED TO A NEAR WHITE CONDITION PER SSPC-10 SPECIFICATIONS.
2. THE STEEL SHALL BE WASHED IN A ZINC PHOSPHATE IN AN MINIMUM THREE STAGE ELECTRO DEPOSITION PRE-TREATEMENT PROCESS.
3. IMMEDIATELY FOLLOWING PRE-TREATMENT THE STEEL SHALL BE TOTALLY COATED IN AN EPOXY PRIMER TO A UNIFORM THICKNESS OF A MINIMUM OF 0.7 TO 0.9 MILS. THE E-COATING SHALL PROVIDE A MINIMUM OF 1000 HOURS OF SALT SPRAY CORROSION PROTECTION TO THE STEEL.
4. THE STEEL SHALL THEN HAVE A TGIC POLYESTER COLOR COAT APPLIED OVER THE E-COATED SURFACE.
5. THE FINISH THICKNESS OF THESE APPLICATIONS SHALL BE A MINIMUM OF 8 TO 12 MILS.
6. ALL CARBON STEEL MEMBERS (COLUMNS, BEAMS, PLATES & COLD FORMED STEEL ETC.) NOT POWDER-COATED SHALL BE PAINTED WITH PRIME COAT PER THE "AISC CODE OF STANDARD PRACTICE" AND THE "AISC SPECIFICATION SECTION M3"(UNLESS NOTED OTHERWISE).

IDENTIFICATION STAMP
DIV. OF THE STATE ARCHITECT
APP: 02-121754 INC:
REVIEWED FOR
SS ☐ FLS ☐ ACS ☑
DATE: 02/21/2024

ICON STD	RG/DSA-PC
DRAWN BY	JD
DATE	3/21/2023
REV	
REV DATE	

JRMA
ARCHITECTS ENGINEERS
2700 SATURN ST I BREA, CA 92821
T. 714.524.1870 I F. 714.524.1875
WWW.JRMA.COM

Aug 31, 2023

APPROVED
DIV. OF THE STATE ARCHITECT
APP: 04-122188 PC
REVIEWED FOR
SS ☑ FLS ☑ ACS ☑ CG ☐
DATE: 09/21/2023

GENERAL INFO

ICON Shelter Systems Inc
DISTINCTIVE STEEL SHELTERS
WWW.ICONSHELTERS.COM

1455 LINCOLN AVE
HOLLAND MI, 49423

616.396.0919
800.748.0985
616.396.0944 FX

LS1.1

PRE-CHECK (PC) DOCUMENT
Code: 2022 CBC
A separate project application for construction is required.

PRINTED ON :

DSA 103-22: LISTING OF STRUCTURAL TESTS & SPECIAL INSPECTIONS, 2022 CBC

Application Number: 04-122188	School Name: PC Update	School District: PC Update
DSA File Number:	Increment Number:	Date Created: 2023-04-19 08:36:32

2022 CBC

IMPORTANT: This form is only a summary list of structural tests and some of the special inspections required for the project. Generally, the structural tests and special inspections noted on this form are those that will be performed by the Geotechnical Engineer of Record, Laboratory of Record, or Special Inspector. The actual complete test and inspection program must be performed as detailed on the DSA approved documents. The appendix at the bottom of this form identifies work NOT subject to DSA requirements for special inspection or structural testing. The project inspector is responsible for providing inspection of all facets of construction, including but not limited to, special inspections not listed on this form such as structural wood framing, high-load wood diaphragms, cold-formed steel framing, anchorage of non-structural components, etc., per Title 24, Part 2, Chapter 17A (2022 CBC).

**NOTE: Undefined section and table references found in this document are from the CBC, or California Building Code.

KEY TO COLUMNS

1. TYPE	2. PERFORMED BY
Continuous – Indicates that a continuous special inspection is required Periodic – Indicates that a periodic special inspection is required Test – Indicates that a test is required	GE (Geotechnical Engineer) – Indicates that the special inspection shall be performed by a registered geotechnical engineer or his or her authorized representative. LOR (Laboratory of Record) – Indicates that the test or special inspection shall be performed by a testing laboratory accepted in the DSA Laboratory Evaluation and Acceptance (LEA) Program. See CAC Section 4-335. PI (Project Inspector) – Indicates that the special inspection may be performed by a project inspector when specifically approved by DSA. SI (Special Inspection) – Indicates that the special inspection shall be performed by an appropriately qualified/approved special inspector.

DSA 103-22: LISTING OF STRUCTURAL TESTS & SPECIAL INSPECTIONS (SOILS), 2022 CBC

Table 1705A.6, Table 1705A.7, Table 1705A.8

Application Number: 04-122188	School Name: PC Update	School District: PC Update
DSA File Number:	Increment Number:	Date Created: 2023-04-19 08:36:32

Geotechnical Reports: Project has a geotechnical report, or CDs indicate soils special inspection is required by GE

	S1. GENERAL:			
	Test or Special Inspection	Type	Performed By	Code References and Notes
☑	a. Verify that: • Site has been prepared properly prior to placement of controlled fill and/or excavations for foundations. • Foundation excavations are extended to proper depth and have reached proper material. • Materials below footings are adequate to achieve the design bearing capacity.	Periodic	GE*	* By geotechnical engineer or his or her qualified representative. (See Appendix (end of this form) form for exemptions.)

	S2. SOIL COMPACTION AND FILL:			
	Test or Special Inspection	Type	Performed By	Code References and Notes
☐	a. Perform classification and testing of fill materials.	Test	LOR*	* Under the supervision of the geotechnical engineer.
☑	b. Verify use of proper materials, densities and inspect lift thicknesses, placement and compaction during placement of fill.	Continuous	GE*	* By geotechnical engineer or his or her qualified representative. (Refer to specific items identified in the Appendix (end of this form) form for exemptions where soils SI and testing may be conducted under the supervision of a geotechnical engineer or LOR's engineering manager. In such cases, the LOR's form DSA 291 shall satisfy the soil SI and test reporting requirements for the exempt items.)
☑	c. Compaction testing.	Test	LOR*	* Under the supervision of the geotechnical engineer. (Refer to specific items identified in the Appendix (end of this form) for exemptions where soils testing may be conducted under the supervision of a geotechnical engineer or LOR's engineering manager. In such cases, the LOR's form DSA 291 shall satisfy the soil test reporting requirements for the exempt items.)

DSA 103-22: LISTING OF STRUCTURAL TESTS & SPECIAL INSPECTIONS (SOILS), 2022 CBC

Table 1705A.6, Table 1705A.7, Table 1705A.8

Application Number: 04-122188	School Name: PC Update	School District: PC Update
DSA File Number:	Increment Number:	Date Created: 2023-04-19 08:36:32

	S3. DRIVEN DEEP FOUNDATIONS (PILES):			
	Test or Special Inspection	Type	Performed By	Code References and Notes
☐	a. Verify pile materials, sizes and lengths comply with the requirements.	Continuous	GE*	* By geotechnical engineer or his or her qualified representative.
☐	b. Determine capacities of test piles and conduct additional load tests as required.	Test	LOR*	* Under the supervision of the geotechnical engineer.
☐	c. Inspect driving operations and maintain complete and accurate records for each pile.	Continuous	GE*	* By geotechnical engineer or his or her qualified representative.
☐	d. Verify locations of piles and their plumbness, confirm type and size of hammer, record number of blows per foot of penetration, determine required penetrations to achieve design capacity, record tip and butt elevations and record any pile damage.	Continuous	GE*	* By geotechnical engineer or his or her qualified representative.
☐	e. Steel piles.	Provide tests and inspections per STEEL section below.		
☐	f. Concrete piles and concrete filled piles.	Provide tests and inspections per CONCRETE section below.		
☐	g. For specialty piles, perform additional inspections as determined by the registered design professional in responsible charge.	*	*	* As defined on drawings or specifications.

	S4. CAST-IN-PLACE DEEP FOUNDATIONS (PIERS):			
	Test or Special Inspection	Type	Performed By	Code References and Note
☐	a. Inspect drilling operations and maintain complete and accurate records for each pier.	Continuous	GE*	* By geotechnical engineer or his or her qualified representative. (See Appendix (end of this form) for exemptions.)

DSA 103-22: LISTING OF STRUCTURAL TESTS & SPECIAL INSPECTIONS (SOILS), 2022 CBC

Table 1705A.6, Table 1705A.7, Table 1705A.8

Application Number: 04-122188	School Name: PC Update	School District: PC Update
DSA File Number:	Increment Number:	Date Created: 2023-04-19 08:36:32

	Test or Special Inspection	Type	Performed By	Code References and Note
☐	b. Verify pier locations, diameters, plumbness, bell diameters (if applicable), lengths and embedment into bedrock (if applicable); record concrete or grout volumes.	Continuous	GE*	* By geotechnical engineer or his or her qualified representative. (See Appendix (end of this form) for exemptions.)
☐	c. Confirm adequate end strata bearing capacity.	Continuous	GE*	* By geotechnical engineer or his or her qualified representative. (See Appendix (end of this form) for exemptions.)
☐	d. Concrete piers.	Provide tests and inspections per CONCRETE section below.		

	S5. RETAINING WALLS:			
	Test or Special Inspection	Type	Performed By	Code References and Notes
☐	a. Placement, compaction and inspection of backfill.	Continuous	GE*	1705A.6.1. * By geotechnical engineer or his or her qualified representative. (See section S2 above).
☐	b. Placement of soil reinforcement and/or drainage devices.	Continuous	GE*	* By geotechnical engineer or his or her qualified representative.
☐	c. Segmental retaining walls; inspect placement of units, dowels, connectors, etc.	Continuous	GE*	* By geotechnical engineer or his or her qualified representative. See DSA IR 18-2.
☐	d. Concrete retaining walls.	Provide tests and inspections per CONCRETE section below.		
☐	e. Masonry retaining walls.	Provide tests and inspections per MASONRY section below.		

DSA 103-22: LISTING OF STRUCTURAL TESTS & SPECIAL INSPECTIONS (SOILS), 2022 CBC

Table 1705A.6, Table 1705A.7, Table 1705A.8

Application Number: 04-122188	School Name: PC Update	School District: PC Update
DSA File Number:	Increment Number:	Date Created: 2023-04-19 08:36:32

	S6. OTHER SOILS:			
	Test or Special Inspection	Type	Performed By	Code References and Notes
☐	a. Soil Improvements	Test	GE*	Submit a comprehensive report documenting final soil improvements constructed, construction observation and the results of the confirmation testing and analysis to CGS (California Geological Survey) for final acceptance. * By geotechnical engineer or his or her qualified representative.
☐	b. Inspection of Soil Improvements	Continuous	GE*	* By geotechnical engineer or his or her qualified representative.
☐	c.			

DSA 103-22: LISTING OF STRUCTURAL TESTS & SPECIAL INSPECTIONS (CONCRETE), 2022 CBC

Table 1705A.3; ACI 318-19 Sections 26.12 & 26.13

Application Number: 04-122188	School Name: PC Update	School District: PC Update
DSA File Number:	Increment Number:	Date Created: 2023-04-19 08:36:32

	C1. CAST-IN-PLACE CONCRETE			
	Test or Special Inspection	Type	Performed By	Code References and Notes
☑	a. Verify use of required design mix.	Periodic	SI	Table 1705A.3 Item 5, 1910A.1.
☑	b. Identify, sample, and test reinforcing steel.	Test	LOR	1910A.2; ACI 318-19 Ch.20 and Section 26.6.1.2; DSA IR 17-10. (See Appendix (end of this form) for exemptions.)
☑	c. During concrete placement, fabricate specimens for strength tests, perform slump and air content tests, and determine the temperature of the concrete.	Test	LOR	Table 1705A.3 Item 6; ACI 318-19 Sections 26.5 & 26.12.
☑	d. Test concrete (f'_c).	Test	LOR	1905A.1.17; ACI 318-19 Section 26.12.
☐	e. Batch plant inspection:	See Notes	SI	Default of 'Continuous' per 1705A.3.3. If approved by DSA, batch plant inspection may be reduced to 'Periodic' subject to requirements in Section 1705A.3.3.1, or eliminated per 1705A.3.3.2. See IR 17-13. (See Appendix (end of this form) for exemptions.)
☐	f. Welding of reinforcing steel.	Provide special inspection per STEEL, Category S/A4(d) & (e) and/or S/A5(g) & (h) below.		

	C2. PRESTRESSED / POST-TENSIONED CONCRETE (IN ADDITION TO SECTION C1):			
	Test or Special Inspection	Type	Performed By	Code References and Notes
☐	a. Sample and test prestressing tendons and anchorages.	Test	LOR	1705A.3.4, 1910A.3
☐	b. Inspect placement of prestressing tendons.	Periodic	SI	1705A.3.4, Table 1705A.3 Items 1 & 9.

DSA 103-22: LISTING OF STRUCTURAL TESTS & SPECIAL INSPECTIONS (CONCRETE), 2022 CBC

Table 1705A.3; ACI 318-19 Sections 26.12 & 26.13

Application Number: 04-122188	School Name: PC Update	School District: PC Update
DSA File Number:	Increment Number:	Date Created: 2023-04-19 08:36:32

	Test or Special Inspection	Type	Performed By	Code References and Notes
☐	c. Verify in-situ concrete strength prior to stressing of post-tensioning tendons.	Periodic	SI	Table 1705A.3 Item 13. Special inspector to verify specified concrete strength test prior to stressing.
☐	d. Inspect application of post-tensioning or prestressing forces and grouting of bonded prestressing tendons.	Continuous	SI	1705A.3.4, Table 1705A.3 Item 9; ACI 318-14 Section 26.13

	C3. PRECAST CONCRETE (IN ADDITION TO SECTION C1):			
	Test or Special Inspection	Type	Performed By	Code References and Notes
☐	a. Inspect fabrication of precast concrete members.	Continuous	SI	ACI 318-19 Section 26.13.
☐	b. Inspect erection of precast concrete members.	Periodic	SI*	Table 1705A.3 Item 10. * May be performed by PI when specifically approved by DSA.
☐	c. For precast concrete diaphragm connections or reinforcement at joints classified as moderate or high deformability elements (MDE or HDE) in structures assigned to Seismic Design Category D, E or F, inspect such connections and reinforcement in the field for: 1. Installation of the embedded parts 2. Completion of the continuity of reinforcement across joints. 3. Completion of connections in the field.	Continuous	SI	Table 1705A.3; ACI 318-19 Section 26.13.1.3; ACI 550.5
☐	d. Inspect installation tolerances of precast concrete diaphragm connections for compliance with ACI 550.5.	Periodic	SI	Table 1705A.3; ACI 318-19 Section 26.13.1.3; ACI 550.5

DSA 103-22: LISTING OF STRUCTURAL TESTS & SPECIAL INSPECTIONS (CONCRETE), 2022 CBC

Table 1705A.3; ACI 318-19 Sections 26.12 & 26.13

Application Number: 04-122188	School Name: PC Update	School District: PC Update
DSA File Number:	Increment Number:	Date Created: 2023-04-19 08:36:32

	C4. SHOTCRETE (IN ADDITION TO SECTION C1):			
	Test or Special Inspection	Type	Performed By	Code References and Notes
☐	a. Inspect shotcrete placement for proper application techniques.	Continuous	SI	1705A.3.9, Table 1705A.3 Item 7, 1908A.1, 1908A.2, 1908A.3. See ACI 506.2-13 Section 3.4, ACI 506R-16.
☐	b. Sample and test shotcrete (f'_c).	Test	LOR	1908A.2, 1705A.3.9

	C5. POST-INSTALLED ANCHORS:			
	Test or Special Inspection	Type	Performed By	Code References and Notes
☐	a. Inspect installation of post-installed anchors	See Notes	SI*	1617A.1.19, Table 1705A.3 Item 4a (Continuous) & 4b (Periodic), 1705A.3.8 (See Appendix (end of this form) for exemptions). ACI 318-14 Sections 17.8 & 26.13. * May be performed by the project inspector when specifically approved by DSA.
☐	b. Test post-installed anchors.	Test	LOR	1910A.5. (See Appendix (end of this form) for exemptions.)

	C6. OTHER CONCRETE:			
	Test or Special Inspection	Type	Performed By	Code References and Notes
☐	a.			

DSA 103-22: LISTING OF STRUCTURAL TESTS & SPECIAL INSPECTIONS (STEEL AND ALUMNINUM), 2022 CBC

1705A.2.1, Table 1705A.2.1; AISC 303-16, AISC 341-16, AISC 358-16, AISC 360-16; AISI S100-20; RCSC 2014; AWS D1.1, AWS D1.2, AWS D1.3, AWS D1.4, AWS D1.8

Application Number: 04-122188	School Name: PC Update	School District: PC Update
DSA File Number:	Increment Number:	Date Created: 2023-04-19 08:36:32

	S/A1. STRUCTURAL STEEL, COLD-FORMED STEEL AND ALUMINUM USED FOR STRUCTURAL PURPOSES			
	Test or Special Inspection	Type	Performed By	Code References and Notes
☑	a. Verify identification of all materials and: • Mill certificates indicate material properties that comply with requirements. • Material sizes, types and grades comply with requirements.	Periodic	*	Table 1705A.2.1 Item 3a–3c. 2202A.1; AISI S100-20 Section A3.1 & A3.2, AISI S240-20 Section A3 & A5, AISI S220-20 Sections A4 & A6. * By special inspector or qualified technician when performed off-site.
☑	b. Test unidentified materials	Test	LOR	2202A.1.
☑	c. Examine seam welds of HSS shapes	Periodic	SI	DSA IR 17-3.
☑	d. Verify and document steel fabrication per DSA-approved construction documents.	Periodic	SI	Not applicable to cold-formed steel light-frame construction, except for trusses (1705A.2.4).
☐	e. Buckling restrained braces.	Test	LOR	Testing and special inspections in accordance with IR 22-4.

	S/A2. HIGH-STRENGTH BOLTS:			
	Test or Special Inspection	Type	Performed By	Code References and Notes
☑	a. Verify identification markings and manufacturer's certificates of compliance conform to ASTM standards specified in the DSA-approved documents.	Periodic	SI	Table 1705A.2.1 Items 1a & 1b; 2202A.1; AISC 360-16 Section A3.3, J3.1, and N3.2; RCSC 2014 Section 1.5 & 2.1; DSA IR 17-8 & DSA IR 17-9.
☑	b. Test high-strength bolts, nuts and washers.	Test	LOR	Table 1705A.2.1 Item 1c, 2213A.1; RCSC 2014 Section 7.2; DSA IR 17-8.
☑	c. Bearing-type ("snug tight") connections.	Periodic	SI	Table 1705A.2.1 Item 2a, 1705A.2.6, 2204A.2; AISC 360-16 J3.1, J3.2, M2.5 & N5.6; RCSC 2014 Section 9.1; DSA IR 17-9.
☑	d. Pretensioned and slip-critical connections.	*	SI	Table 1705A.2.1 Items 2b & 2c, 1705A.2.6, 2204A.2; AISC 360-16 J3.1, J3.2, M2.5 & N5.6; RCSC 2014 Sections 9.2 & 9.3; DSA IR 17-9. "Continuous" or "Periodic" depends on the tightening method used.

IDENTIFICATION STAMP
DIV. OF THE STATE ARCHITECT
APP: 02-121754 INC:
REVIEWED FOR
SS ☐ FLS ☐ ACS ☑
DATE: 02/21/2024

ICON STD	RG/DSA-PC
DRAWN BY	JD
DATE	3/21/2023
REV	
REV DATE	

JRMA
ARCHITECTS ENGINEERS
2700 SATURN ST I BREA, CA 92821
T. 714.524.1870 I F. 714.524.1875
WWW.JRMA.COM

Aug 31, 2023

APPROVED
DIV. OF THE STATE ARCHITECT
APP: 04-122188 PC
REVIEWED FOR
SS ☑ FLS ☑ ACS ☑ CG ☐
DATE: 09/21/2023

DSA 103

ICON Shelter Systems Inc
DISTINCTIVE STEEL SHELTERS
WWW.ICONSHELTERS.COM

1455 LINCOLN AVE
HOLLAND MI, 49423
616.396.0919
800.748.0985
616.396.0944 FX

LS1.2

PRE-CHECK (PC) DOCUMENT
Code: 2022 CBC
A separate project application for construction is required.

PRINTED ON :

DSA 103-22: LISTING OF STRUCTURAL TESTS & SPECIAL INSPECTIONS (STEEL AND ALUMNINUM), 2022 CBC

1705A.2.1, Table 1705A.2.1; AISC 303-16, AISC 341-16, AISC 358-16, AISC 360-16; AISI S100-20; RCSC 2014; AWS D1.1, AWS D1.2, AWS D1.3, AWS D1.4, AWS D1.8

Application Number: 04-122188
School Name: PC Update
School District: PC Update
DSA File Number:
Increment Number:
Date Created: 2023-04-19 08:36:32

	S/A3. WELDING:			
	Test or Special Inspection	Type	Performed By	Code References and Notes
☑	a. Verify weld filler material identification markings per AWS designation listed on the DSA-approved documents and the WPS.	Periodic	SI	1705A.2.5, Table 1705A.2.1 Items 4 & 5; AWS D1.1 and AWS D1.8 for structural steel; AWS D1.2 for Aluminum; AWS D1.3 for cold-formed steel; AWS D1.4 for reinforcing steel; DSA IR 17-3.
☑	b. Verify weld filler material manufacturer's certificate of compliance.	Periodic	SI	DSA IR 17-3.
☑	c. Verify WPS, welder qualifications and equipment.	Periodic	SI	DSA IR 17-3.

	S/A4. SHOP WELDING (IN ADDITION TO SECTION S/A3):			
	Test or Special Inspection	Type	Performed By	Code References and Notes
☑	a. Inspect groove welds, multi-pass fillet welds, single pass fillet welds > 5/16", plug and slot welds.	Continuous	SI	Table 1705A.2.1 Items 5a.1–4; AISC 360-16 (and AISC 341-16 as applicable); DSA IR 17-3.
☑	b. Inspect single-pass fillet welds ≤ 5/16", floor and roof deck welds.	Periodic	SI	Table 1705A.2.2, Table 1705A.2.1 Items 5a.5 & 5a.6; AISC 360-16 (and AISC 341-16 as applicable); DSA IR 17-3.
☐	c. Inspect welding of stairs and railing systems.	Periodic	SI	1705A.2.1; AISC 360-16 (and AISC 341-16 as applicable); AWS D1.1 & D1.3; DSA IR 17-3.
☐	d. Verification of reinforcing steel weldability other than ASTM A706.	Periodic	SI	1705A.3.1; AWS D1.4; DSA IR 17-3. Verify carbon equivalent reported on mill certificates.
☐	e. Inspect welding of reinforcing steel.	Continuous	SI	Table 1705A.2.1 Item 5b, 1705A.3.1, Table 1705A.3 Item 2, 1903A.8; AWS D1.4; DSA IR 17-3.

DSA 103-22: LISTING OF STRUCTURAL TESTS & SPECIAL INSPECTIONS (STEEL AND ALUMNINUM), 2022 CBC

1705A.2.1, Table 1705A.2.1; AISC 303-16, AISC 341-16, AISC 358-16, AISC 360-16; AISI S100-20; RCSC 2014; AWS D1.1, AWS D1.2, AWS D1.3, AWS D1.4, AWS D1.8

Application Number: 04-122188
School Name: PC Update
School District: PC Update
DSA File Number:
Increment Number:
Date Created: 2023-04-19 08:36:32

	Test or Special Inspection	Type	Performed By	Code References and Notes
	S/A5. FIELD WELDING (IN ADDITION TO SECTION S/A3):			
	Test or Special Inspection	Type	Performed By	Code References and Notes
☐	a. Inspect groove welds, multi-pass fillet welds, single pass fillet welds > 5/16", plug and slot welds.	Continuous	SI	Table 1705A.2.1 Items 5a.1–4; AISC 360-16 (AISC 341-16 as applicable); DSA IR 17-3.
☐	b. Inspect single-pass fillet welds ≤ 5/16".	Periodic	SI	Table 1705A.2.1 Item 5a.5; AISC 360-16 (AISC 341-16 as applicable); DSA IR 17-3.
☐	c. Inspect end-welded studs (ASTM A-108) installation (including bend test).	Periodic	SI	2213A.2; AISC 360-16 (AISC 341-16 as applicable); AWS D1.1; DSA IR 17-3.
☐	d. Inspect floor and roof deck welds.	Periodic	SI	1705A.2.2, Table 1705A.2.1 Item 5a.6; AISC 360-16 (AISC 341-16 as applicable); AWS D1.3; DSA IR 17-3.
☐	e. Inspect welding of structural cold-formed steel.	Periodic	SI*	1705A.2.5; AWS D1.3; DSA IR 17-3. The quality control provisions of AISI S240-20 Chapter D shall also apply. * May be performed by the project inspector when specifically approved by DSA.
☐	f. Inspect welding of stairs and railing systems.	Periodic	SI*	1705A.2.1; AISC 360-16 (AISC 341-16 as applicable); AWS D1.1 & D1.3; DSA IR 17-3. * May be performed by the project inspector when specifically approved by DSA.
☐	g. Verification of reinforcing steel weldability.	Periodic	SI	1705A.3.1; AWS D1.4; DSA IR 17-3. Verify carbon equivalent reported on mill certificates.
☐	h. Inspect welding of reinforcing steel.	Continuous	SI	Table 1705A.2.1 Item 5b, 1705A.3.1, Table 1705A.3 Item 2, 1903A.8; AWS D1.4; DSA IR 17-3.

DSA 103-22: LISTING OF STRUCTURAL TESTS & SPECIAL INSPECTIONS (STEEL AND ALUMNINUM), 2022 CBC

1705A.2.1, Table 1705A.2.1; AISC 303-16, AISC 341-16, AISC 358-16, AISC 360-16; AISI S100-20; RCSC 2014; AWS D1.1, AWS D1.2, AWS D1.3, AWS D1.4, AWS D1.8

Application Number: 04-122188
School Name: PC Update
School District: PC Update
DSA File Number:
Increment Number:
Date Created: 2023-04-19 08:36:32

	Test or Special Inspection	Type	Performed By	Code References and Notes
	S/A6. NONDESTRUCTIVE TESTING:			
	Test or Special Inspection	Type	Performed By	Code References and Notes
☐	a. Ultrasonic	Test	LOR	1705A.2.1, 1705A.2.5; AISC 341-16 J6.2, AISC 360-16 N5.5; AWS D1.1, AWS D1.8; DSA IR 17-2.
☐	b. Magnetic Particle	Test	LOR	1705A.2.1, 1705A.2.5; AISC 341-16 J6.2, AISC 360-16 N5.5; AWS D1.1, AWS D1.8; DSA IR 17-2.
☐	c.	Test	LOR	

	S/A7. STEEL JOISTS AND TRUSSES:			
	Test or Special Inspection	Type	Performed By	Code References and Notes
☐	a. Verify size, type and grade for all chord and web members as well as connectors and weld filler material; verify joist profile, dimensions and camber (if applicable); verify all weld locations, lengths and profiles; mark or tag each joist.	Continuous	SI	1705A.2.3, Table 1705A.2.3; AWS D1.1; DSA IR 22-3 for steel joists only. 1705A.2.4; AWS D1.3 for cold-formed steel trusses.

DSA 103-22: LISTING OF STRUCTURAL TESTS & SPECIAL INSPECTIONS (STEEL AND ALUMNINUM), 2022 CBC

1705A.2.1, Table 1705A.2.1; AISC 303-16, AISC 341-16, AISC 358-16, AISC 360-16; AISI S100-20; RCSC 2014; AWS D1.1, AWS D1.2, AWS D1.3, AWS D1.4, AWS D1.8

Application Number: 04-122188
School Name: PC Update
School District: PC Update
DSA File Number:
Increment Number:
Date Created: 2023-04-19 08:36:32

	Test or Special Inspection	Type	Performed By	Code References and Notes
	S/A8. SPRAYED FIRE-RESISTANT MATERIALS:			
	Test or Special Inspection	Type	Performed By	Code References and Notes
☐	a. Examine structural steel surface conditions, inspect application, take samples, measure thickness and verify compliance of all aspects of application with DSA-approved documents.	Periodic	SI	1705A.15, 1705A.1, 1705A.2, 1705A.3, 1705A.4.
☐	b. Test density.	Test	LOR	1705A.15.1, 1705A.15.5, ASTM E736
☐	c. Bond strength adhesion/cohesion.	Test	LOR	1705A.15.1, 1705A.15.4, ASTM E605

	S/A9. ANCHOR BOLTS AND ANCHOR RODS:			
	Test or Special Inspection	Type	Performed By	Code References and Notes
☑	a. Anchor Bolts and Anchor Rods	Test	LOR	Sample and test anchor bolts and anchor rods not readily identifiable per procedures noted in DSA IR 17-11.
☐	b. Threaded rod not used for foundation anchorage.	Test	LOR	Sample and test threaded rods not readily identifiable per procedures noted in DSA IR 17-11.

	S/A10. STORAGE RACK SYSTEMS:			
	Test or Special Inspection	Type	Performed By	Code References and Notes
☐	a. Materials used, to verify compliance with one or more of the material test reports in accordance with the approved construction documents.	Periodic	SI	Table 1705A.13.7
☐	b. Fabricated storage rack elements.	Periodic	SI	1704A.2.5; Table 1705A.13.7

DSA 103-22: LISTING OF STRUCTURAL TESTS & SPECIAL INSPECTIONS (STEEL AND ALUMNINUM), 2022 CBC

1705A.2.1, Table 1705A.2.1; AISC 303-16, AISC 341-16, AISC 358-16, AISC 360-16; AISI S100-20; RCSC 2014; AWS D1.1, AWS D1.2, AWS D1.3, AWS D1.4, AWS D1.8

Application Number: 04-122188
School Name: PC Update
School District: PC Update
DSA File Number:
Increment Number:
Date Created: 2023-04-19 08:36:32

	Test or Special Inspection	Type	Performed By	Code References and Notes
☐	c. Storage rack anchorage installation.	Periodic	SI	ANSI/MH16.1 Section 7.3.2; Table 1705A.13.7
☐	d. Completed storage rack system to indicate compliance with the approved construction documents.	Periodic	SI*	Table 1705A.13.7; * May be preformed by the project inspector when specifically approved by DSA.

	S/A11. Other Steel			
	Test or Special Inspection	Type	Performed By	Code References and Notes
☐	a.			

DSA 103-22: LISTING OF STRUCTURAL TESTS & SPECIAL INSPECTIONS (OTHER), 2022 CBC

Application Number: 04-122188
School Name: PC Update
School District: PC Update
DSA File Number:
Increment Number:
Date Created: 2023-04-19 08:36:32

	X1. OTHER:			
	Test or Special Inspection	Type	Performed By	Code References and Notes
☐	a. Load test for identified product(s):	Test	LOR	1709A.2, 1709A.3. Testing is not required for: 1) a product with a valid evaluation service report per DSA IR A-5, or 2) a product that can be justified by structural calculation.
☐	b. Installation torque for non-HS bolts	Continuous	SI*	Applicable to communication towers identified as Essential Service Facility Projects (ESFP). Calibrated wrench use required, verified by SI during installation. DSA Policy PL 18-01: Communication Towers, Poles and Buildings Utilized by State Agencies for Essential Services Communications.*EXCEPTION: Non-ESFP may use PI without need for notification to DSA.
☐	c.			

Appendix: Work Exempt from DSA Requirements for Structural Tests / Special Inspections

Application Number: 04-122188
School Name: PC Update
School District: PC Update
DSA File Number:
Increment Number:
Date Created: 2023-04-19 08:36:32

Exempt items given in DSA IR A-22 or the 2019 CBC (including DSA amendments) and those items identified below with a check mark by the design professional are NOT subject to DSA requirements for the structural tests / special inspections noted. Items marked as exempt shall be identified on the approved construction documents. The project inspector shall verify all construction complies with the approved construction documents.

	SOILS:
☐	1. Deep foundations acting as a cantilever footing with a design based on minimum allowable pressures per CBC Table 1806A.2 and without a geotechnical report for the following cases: A) free standing sign or scoreboard, B) cell or antenna towers and poles less than 35'-0" tall (e.g., lighting poles, flag poles, poles supporting open mesh fences, etc.), C) single-story structure with dead load less than 5 psf (e.g., open fabric shade structure), or D) covered walkway structure with an apex height less than 10'-0" above adjacent grade.
☐	2. Shallow foundations, etc. are exempt from special inspections and testing by a Geotechnical Engineer for the following cases: A) buildings without a geotechnical report and meeting the exception item #1 criteria in CBC Section 1803A.2 supported by native soil (any excavation depth) or fill soil (not exceeding 12" depth per CBC Section 1804A.6), B) soil scarification/recompaction not exceeding 12" depth, C) native or fill soil supporting exterior non-structural flatwork (e.g., sidewalks, site concrete ramps, site stairs, parking lots, driveways, etc.), D) unpaved landscaping and playground areas, or E) utility trench backfill.

	CONCRETE/MASONRY:
☐	1. Post-installed anchors for the following: A) exempt non-structural components (e.g., mechanical, electrical, plumbing equipment - see item 7 for "Welding" in the Appendix below) given in CBC Section 1617A.1.18 (which replaces ASCE 7-16, Section 13.1.4) or B) interior nonstructural wall partitions meeting criteria listed in exempt item 3 for "Welding" in the Appendix below
☐	2. Concrete batch plant inspection is not required for items given in CBC Section 1705A.3.3.2 subject to the requirements and limitations in that section.
☐	3. Non-bearing non-shear masonry walls may be exempt from certain DSA masonry testing and special inspection items as allowed per DSA IR 21-1. Refer to construction documents for specific exemptions accordingly for each applicable wall condition.
☐	4. Epoxy shear dowels in site flatwork and/or other non-structural concrete.

Appendix: Work Exempt from DSA Requirements for Structural Tests / Special Inspections

Application Number: 04-122188
School Name: PC Update
School District: PC Update
DSA File Number:
Increment Number:
Date Created: 2023-04-19 08:36:32

	CONCRETE/MASONRY:
☐	5. Testing of reinforcing bars is not required for items given in CBC Section 1910A.2 subject to the requirements and limitations in that section.

	WELDING:
☐	1. Solid-clad and open-mesh fences, gates with maximum leaf span of 10', and gates with a maximum rolling section of 10' all having an apex height less than 8'-0" above lowest adjacent grade. When located above circulation or occupied space below, these gates/fences are not located within 1.5x gate/fence height (max 8'-0") to the edge of floor or roof.
☐	2. Handrails, guardrails, and modular or relocatable ramps associated with walking surfaces less than 30" above adjacent grade (excluding post base connections per the 'Exception' language in Section 1705A.2.1); fillet welds shall not be ground flush.
☐	3. Non-structural interior cold-formed steel framing spanning less than 15'-0", such as in interior partitions, interior soffits, etc. supporting only self weight and light-weight finishes or adhered tile, masonry, stone, or terra cotta veneer no more than 5/8" thickness and apex less than 20'-0" in height and not over an exit way. Maximum tributary load to a member shall not exceed the equivalent of that occurring from a 10'x10' opening in a 15' tall wall for a header or king stud.
☐	4. Manufactured support frames and curbs using hot rolled or cold-formed steel (i.e., light gauge) for mechanical, electrical, or plumbing equipment weighing less than 2000# (equipment only) (connections of such frames to superstructure elements using welding will require special inspection as noted in selected item(s) for Sections S/A3, S/A4 and/or S/A5 of listing above).
☐	5. Manufactured components (e.g., Tolco, B-Line, Afcon, etc.) for mechanical, electrical, or plumbing hanger support and bracing (connections of such components to superstructure elements using welding will require special inspection as noted in selected item(s) for Sections S/A3, S/A4 and/or S/A5 of listing above).
☐	6. TV Brackets, projector mounts with a valid listing (see DSA IR A-5) and recreational equipment (e.g., playground structures, basketball backstops, etc.) (connections of such elements to superstructure elements using welding will require special inspection as noted in selected item(s) for sections S/A3, S/A4 and/or S/A5 located in the Steel/Aluminum category of listing above).
☐	7. Any support for exempt non-structural components given in CBC Section 1617A.1.18 (which replaces ASCE 7-16, Section 13.1.4) meeting the following: A) when supported on a floor/roof, <400# and resulting composite center of mass (including component's center of mass) ≤4' above supporting floor/roof, B) when hung from a wall or roof/floor, <20# for discrete units or <5 plf for distributed systems.

DSA 103-22: LISTING OF STRUCTURAL TESTS & SPECIAL INSPECTIONS(SIGNATURE), 2022 CBC

Application Number: 04-122188
School Name: PC Update
School District: PC Update
DSA File Number:
Increment Number:
Date Created: 2023-04-19 08:36:32

Name of Architect or Engineer in general responsible charge:

Name of Structural Engineer (When structural design has been delegated):

Signature of Architect or Structural Engineer: Date:

Note: To facilitate DSA electronic mark-ups and identification stamp application, DSA recommends against using secured electronic or digital signatures.

DSA STAMP

PRE-CHECK (PC) DOCUMENT
Code: 2022 CBC
A separate project application for construction is required.

IDENTIFICATION STAMP
DIV. OF THE STATE ARCHITECT
APP: 02-121754 INC: A
REVIEWED FOR
SS ☐ FLS ☐ ACS ☑
DATE: 02/21/2024

APPROVED
DIV. OF THE STATE ARCHITECT
APP: 04-122188 PC
REVIEWED FOR
SS ☑ FLS ☑ ACS ☑ CG ☐
DATE: 09/21/2023

ICON STD	RG/DSA-PC
DRAWN BY	JD
DATE	3/21/2023
REV	
REV DATE	

JRMA
ARCHITECTS ENGINEERS
2700 SATURN ST I BREA, CA 92821
T. 714.524.1870 I F. 714.524.1875
WWW.JRMA.COM

Aug 31, 2023

DSA 103

ICON Shelter Systems Inc
DISTINCTIVE STEEL SHELTERS
WWW.ICONSHELTERS.COM

1455 LINCOLN AVE
HOLLAND MI, 49423
616.396.0919
800.748.0985
616.396.0944 FX

LS1.3

PRINTED ON :

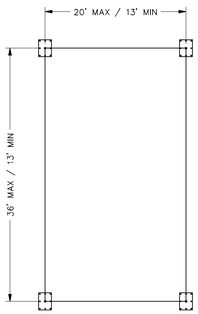

RG40X24 COLUMN LAYOUT
(1 BAY)

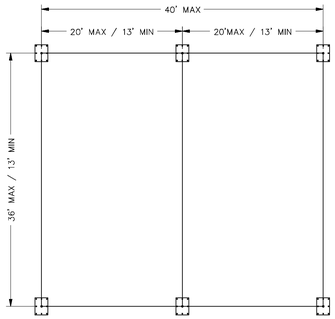

RG40X44 COLUMN LAYOUT
(2 BAYS)

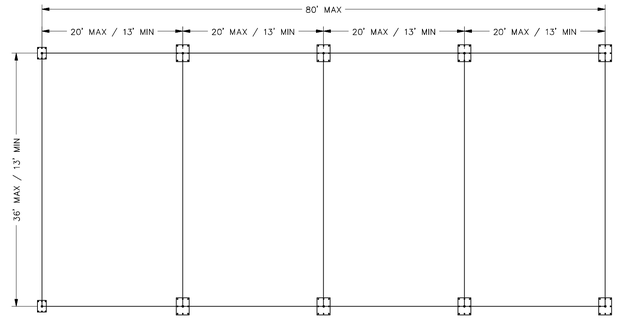

RG40X84 COLUMN LAYOUT
(4 BAYS)

BASE PLATE LOCATION		
	DETAIL A	DETAIL B
8'	BP1	BP2
10'	BP1	BP2
12'	BP1	BP2

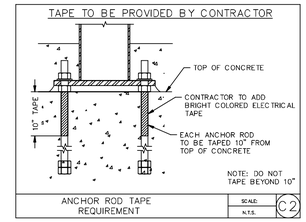

ANCHOR ROD TAPE REQUIREMENT — SCALE: N.T.S. — C2

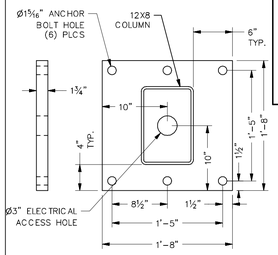

12X8 COLUMN BASE PLATE DETAIL — BP1

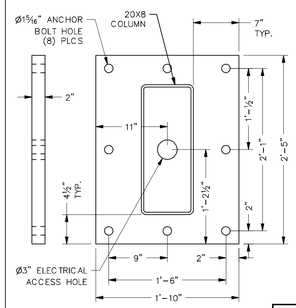

20X8 COLUMN BASE PLATE DETAIL — BP2

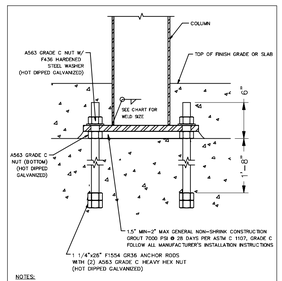

NOTES:

COLUMN BASE PLATES ARE TO HAVE DOUBLE NUTS. PLACE ONE NUT UNDER THE PLATE AND ONE NUT ON TOP WITH A WASHER UNDER THE NUT.

THE BOTTOM NUT CAN BE USED AS A LEVELING NUT.

AFTER COLUMN IS SET AND LEVELED AND THE NUTS HAVE BEEN TIGHTENED THE COLUMN MUST HAVE NON-SHRINK GROUT PLACED UNDER THE BASE PLATE BEFORE COVERING THE BASE WITH CONCRETE.

REFER TO FOOTING DETAIL FOR ROD/NUT LOCATIONS AND SIZE.

FOUNDATION ANCHORS ARE TO BE UNTORQUED.

COLUMN BASE CONNECTION DETAIL — SCALE: N.T.S. — C1

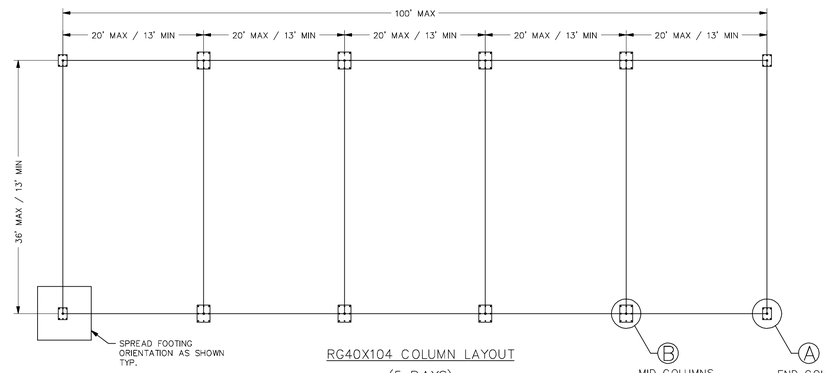

RG40X104 COLUMN LAYOUT
(5 BAYS)

MID COLUMNS — END COLUMNS

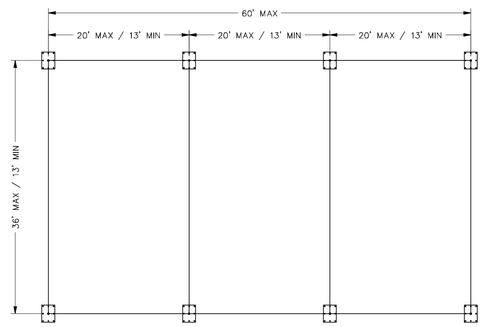

RG40X64 COLUMN LAYOUT
(3 BAYS)

ANCHOR ROD DETAIL
1.HEAT TREATED
2.MAX CARBON CONTENT-27%
3.MAX MANGANESE CONTENT
0.6 TO 0.9%

NOTES:
COLUMN SIZE AND LOCATION WILL VARY DEPENDING ON MODEL TYPE ORDERED, PLEASE REFER TO JOB SPECIFIC BILL OF MATERIALS AND INSTALLATION MANUAL FOR CORRECT PLACEMENT AND SIZE.

WHERE CONCRETE SLAB SPECIFIED PORTLAND CEMENT CONCRETE PAVING SHALL HAVE A MEDIUM SALTED (MEDIUM BROOM) FINISH ON ALL SURFACES SLOPED LESS THAN 6% AND SLIP RESISTANT (HEAVY BROOM FINISH) ON ALL SURFACES SLOPED GREATER THAN 6% CBC SECTION 1133B.7.1

40' WIDE RECTANGULAR GABLE

ALL ANCHOR RODS SHALL BE 1.25"X26" U.N.O.

IDENTIFICATION STAMP
DIV. OF THE STATE ARCHITECT
APP: 02-121754 INC:
REVIEWED FOR
SS ☐ FLS ☐ ACS ☑
DATE: 02/21/2024

ICON STD	RG/DSA-PC
DRAWN BY	JD
DATE	3/21/2023
REV	
REV DATE	

JRMA
ARCHITECTS ENGINEERS
2700 SATURN ST BREA, CA 92821
T. 714.524.1870 F. 714.524.1875
WWW.JRMA.COM

Aug 31, 2023

APPROVED
DIV. OF THE STATE ARCHITECT
APP: 04-122188 PC
REVIEWED FOR
SS ☑ FLS ☑ ACS ☑ CG ☐
DATE: 09/21/2023

RG40 - SPREAD

8' End Columns				8' End Columns				8' End Columns			
Soil Class 5 - 1500 psf Bearing				Soil Class 4 - 2000 psf Bearing				Soil Class 3 - 3000 psf Bearing			
Size (A) (in)	Depth (in)	T&B Rebar Qty	Rebar Size	Size (A) (in)	Depth (in)	T&B Rebar Qty	Rebar Size	Size (A) (in)	Depth (in)	T&B Rebar Qty	Rebar Size
120	30	15	6	120	30	15	6	96	30	12	6
8' Side Columns				**8' Side Columns**				**8' Side Columns**			
Soil Class 5 - 1500 psf Bearing				Soil Class 4 - 2000 psf Bearing				Soil Class 3 - 3000 psf Bearing			
Size (A) (in)	Depth (in)	T&B Rebar Qty	Rebar Size	Size (A) (in)	Depth (in)	T&B Rebar Qty	Rebar Size	Size (A) (in)	Depth (in)	T&B Rebar Qty	Rebar Size
168	30	21	6	168	30	21	6	138	30	17	6
8' Eave - 1500 psf [ ]				**8' Eave - 2000 psf [ ]**				**8' Eave - 3000 psf [ ]**			

10' End Columns				10' End Columns				10' End Columns			
Soil Class 5 - 1500 psf Bearing				Soil Class 4 - 2000 psf Bearing				Soil Class 3 - 3000 psf Bearing			
Size (A) (in)	Depth (in)	T&B Rebar Qty	Rebar Size	Size (A) (in)	Depth (in)	T&B Rebar Qty	Rebar Size	Size (A) (in)	Depth (in)	T&B Rebar Qty	Rebar Size
102	30	13	6	102	30	13	6	90	30	12	6
10' Side Columns				**10' Side Columns**				**10' Side Columns**			
Soil Class 5 - 1500 psf Bearing				Soil Class 4 - 2000 psf Bearing				Soil Class 3 - 3000 psf Bearing			
Size (A) (in)	Depth (in)	T&B Rebar Qty	Rebar Size	Size (A) (in)	Depth (in)	T&B Rebar Qty	Rebar Size	Size (A) (in)	Depth (in)	T&B Rebar Qty	Rebar Size
156	30	20	6	156	30	20	6	126	30	16	6
10' Eave - 1500 psf [ ]				**10' Eave - 2000 psf [ ]**				**10' Eave - 3000 psf [ ]**			

12' End Columns				12' End Columns				12' End Columns			
Soil Class 5 - 1500 psf Bearing				Soil Class 4 - 2000 psf Bearing				Soil Class 3 - 3000 psf Bearing			
Size (A) (in)	Depth (in)	T&B Rebar Qty	Rebar Size	Size (A) (in)	Depth (in)	T&B Rebar Qty	Rebar Size	Size (A) (in)	Depth (in)	T&B Rebar Qty	Rebar Size
90	30	12	6	90	30	12	6	90	30	12	6
12' Side Columns				**12' Side Columns**				**12' Side Columns**			
Soil Class 5 - 1500 psf Bearing				Soil Class 4 - 2000 psf Bearing				Soil Class 3 - 3000 psf Bearing			
Size (A) (in)	Depth (in)	T&B Rebar Qty	Rebar Size	Size (A) (in)	Depth (in)	T&B Rebar Qty	Rebar Size	Size (A) (in)	Depth (in)	T&B Rebar Qty	Rebar Size
144	30	18	6	144	30	18	6	114	30	14	6
1500 psf 12' Eave [ ]				**2000 psf 12' Eave [ ]**				**3000 psf 12' Eave [ ]**			

8' End Columns			
Tie Dimensions			Weld
B (in)	C (in)	Rebar Size	Fillet Weld "W"
22	23.5	4	1/4
8' Side Columns			
			Weld
B (in)	C (in)	Rebar Size	Fillet Weld "W"
24	35.5	4	5/16
8' Eave - Rebar & Weld			

10' End Columns			
			Weld
B (in)	C (in)	Rebar Size	Fillet Weld "W"
22	23.5	4	3/8
10' Side Columns			
			Weld
B (in)	C (in)	Rebar Size	Fillet Weld "W"
24	35.5	4	3/8
10' Eave - Rebar & Weld			

12' End Columns			
			Weld
B (in)	C (in)	Rebar Size	Fillet Weld "W"
22	23.5	4	1/2
12' Side Columns			
			Weld
B (in)	C (in)	Rebar Size	Fillet Weld "W"
24	35.5	4	1/2
12' Eave - Rebar & Weld			

SEE BASE PLATE DETAILS FOR CORRECT ANCHOR LAYOUT

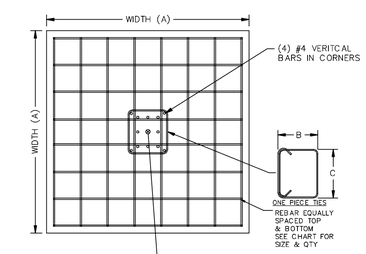

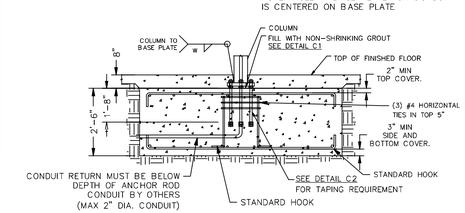

SEE DETAILS BP1, BP2 OR BP3 FOR ANCHOR BOLT PATTERNS
B1 & B2 ARE A (6) BOLT PATTERN WHILE B3 IS AN (8) BOLT

PRE-CHECK (PC) DOCUMENT
Code: 2022 CBC
A separate project application for construction is required.

40' WIDE
RECTANGULAR GABLE
FOUNDATION PLAN

ICON Shelter Systems Inc
DISTINCTIVE STEEL SHELTERS
WWW.ICONSHELTERS.COM

1455 LINCOLN AVE
HOLLAND MI, 49423
616.396.0919
800.748.0985
616.396.0944 FX

LS4.0

S:\Engineering\Inventor\DSA 2019\PC 2019 RC DSA\New folder\40 F001\DSA RG40-P4.idcm

PRINTED ON :

ALL STRUCTURAL FASTENERS (NUTS, BOLTS & WASHERS) ON THIS SHEET TO BE HOT DIP GALVANIZED

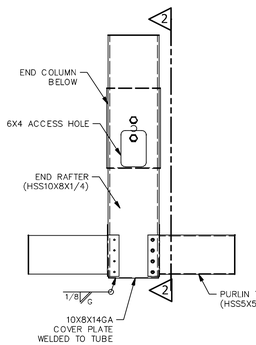

PLAN – PURLIN & END RAFTER CONNECTIONS @ END COLUMN | 1

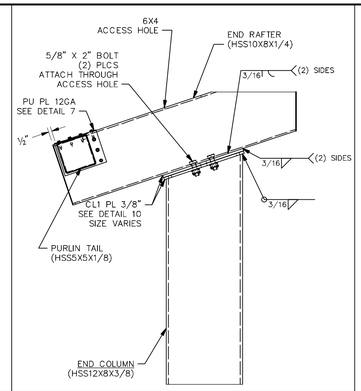

VIEW – PURLIN & END RAFTER CONNECTIONS @ END COLUMN | 2

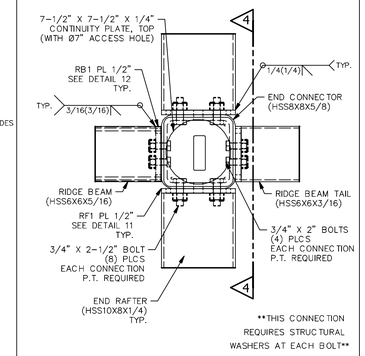

PLAN – END RAFTER & RIDGE BEAM CONNECTIONS @ END CONNECTOR | 3

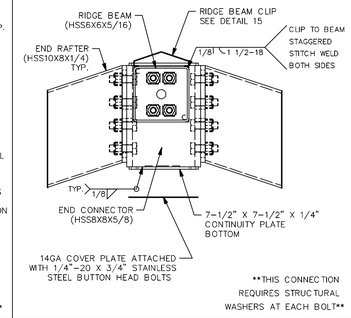

VIEW – END RAFTER & RIDGE BEAM CONNECTIONS @ END CONNECTOR | 4

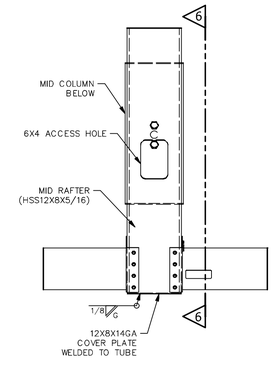

PLAN – PURLIN & MID RAFTER CONNECTIONS @ MID COLUMN | 5

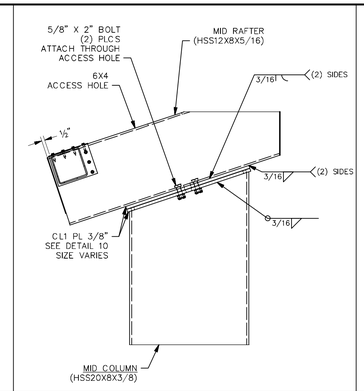

VIEW – PURLIN & MID RAFTER CONNECTIONS @ MID COLUMN | 6

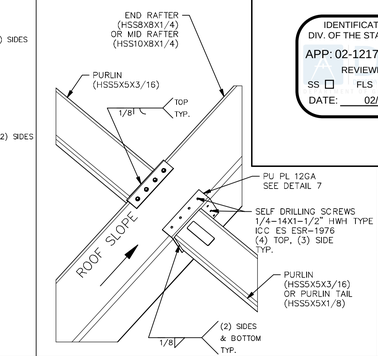

ISOMETRIC – PURLIN CONNECTIONS @ RAFTER | 7

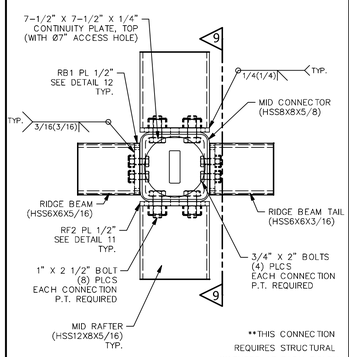

PLAN – MID RAFTER & RIDGE BEAM CONNECTIONS @ MID CONNECTOR | 8

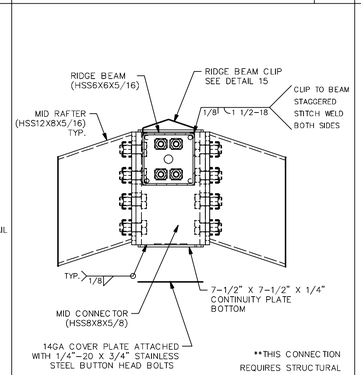

VIEW – MID RAFTER & RIDGE BEAM CONNECTIONS @ MID CONNECTOR | 9

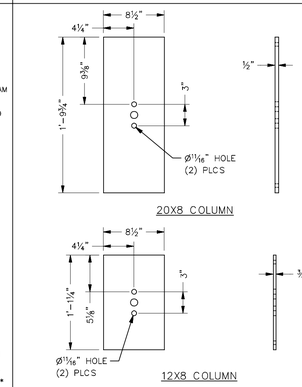

COLUMN TO RAFTER PLATE DETAILS | 10

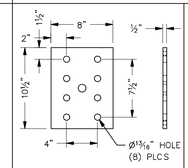

10X8 END RAFTER PLATE DETAIL | 11

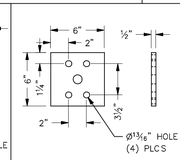

RIDGE BEAM PLATE DETAIL | 12

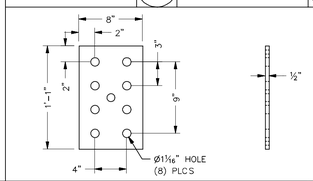

12X8 MID RAFTER PLATE DETAIL | 13

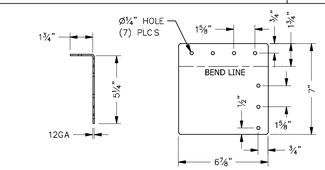

PURLIN PLATE DETAIL | 14

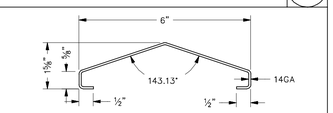

SECTION PROPERTIES
A=0.657 in^2 Fy=36 ksi
Ix=0.087 in^4 Sx=0.03 in^3
Iy=0.087 in^4 Sy=0.97 in^3

RIDGE BEAM CLIP (6" WIDE BEAM) | 15

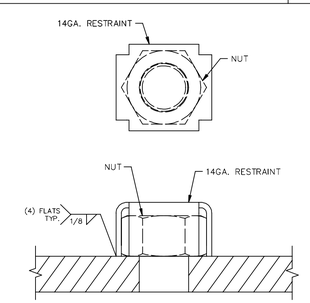

TYPICAL NUT RESTRAINING SYSTEM | NR

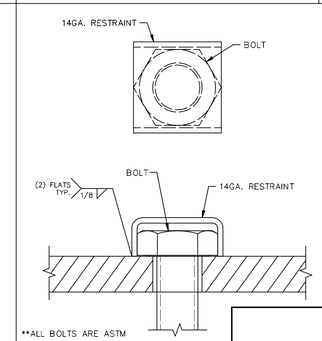

TYPICAL BOLT RESTRAINING SYSTEM | BR

IDENTIFICATION STAMP
DIV. OF THE STATE ARCHITECT
APP: 02-121754 INC:
REVIEWED FOR
SS ☐ FLS ☐ ACS ☑
DATE: 02/21/2024

ICON STD	RG/DSA-PC
DRAWN BY	JD
DATE	3/21/2023
REV	
REV DATE	

JRMA ARCHITECTS ENGINEERS
2700 SATURN ST BREA, CA 92821
T.714.524.1870 F.714.524.1875
WWW.JRMA.COM

REGISTERED PROFESSIONAL ENGINEER
JAMES D. ROSE
No. 29785
STRUCTURAL
STATE OF CALIFORNIA

Aug 31, 2023

APPROVED
DIV. OF THE STATE ARCHITECT
APP: 04-122188 PC
REVIEWED FOR
SS ☑ FLS ☑ ACS ☑ CG ☐
DATE: 09/21/2023

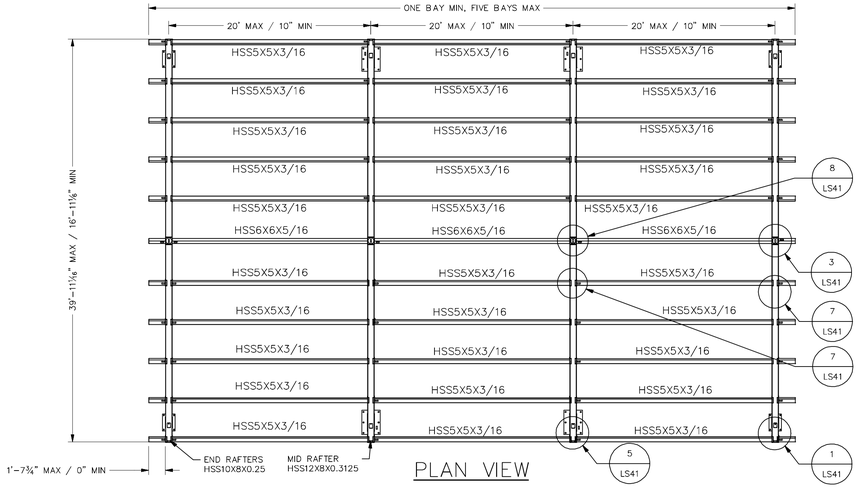

PLAN VIEW

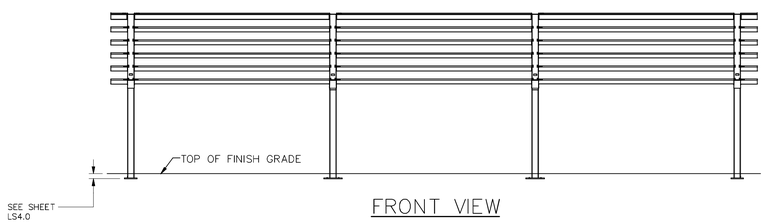

FRONT VIEW

*NOTE:
QUANTITIES WILL VARY DEPENDING ON SHELTER SIZE ORDERED, PLEASE REFER TO JOB SPECIFIC BILL OF MATERIALS AND INSTALLATION MANUAL.

ITEM	QTY	PART NUMBER	DESCRIPTION	MATERIAL	LENGTH	UNIT WEIGHT
1	4		END COLUMN	**SEE NOTE BELOW		564 lbmass
2	*		MID COLUMN	**SEE NOTE BELOW		873 lbmass
3	4		END RAFTER	HSS10X8X1/4		626 lbmass
4	*		MID RAFTER	HSS12X8X5/16		872 lbmass
5	**		PURLIN	HSS5X5X3/16		234 lbmass
6	**		PURLIN TAIL 1	HSS5X5X1/8		15 lbmass
7	**		PURLIN TAIL 2	HSS5X5X1/8		15 lbmass
8	*		RIDGE BEAM	HSS6X6X5/16		333 lbmass
9	2		RIDGE BEAM TAIL	HSS6X6X3/16		34 lbmass
10	2		END CONNECTOR	HSS8X8X5/8		54 lbmass
11	*		MID CONNECTOR	HSS8X8X5/8		63 lbmass

**NOTE:
MATERIAL WILL VARY DEPENDING ON SHELTER SIZE ORDERED.
☐ END COLUMN 8' UTB – (HSS12X8X3/8)
☐ MID COLUMN 8' UTB – (HSS20X8X3/8)

☐ END COLUMN 10' UTB – (HSS12X8X3/8)
☐ MID COLUMN 10' UTB –(HSS20X8X3/8)

☐ END COLUMN 12' UTB – (HSS12X8X3/8)
☐ MID COLUMN 12' UTB – (HSS20X8X3/8)

98" MIN IF USED OVER ACCESSIBLE PARKING OR ACCESS AISLES

114" MIN IF LOCATED OVER ACCESSIBLE PASSENGER LOADING ZONES

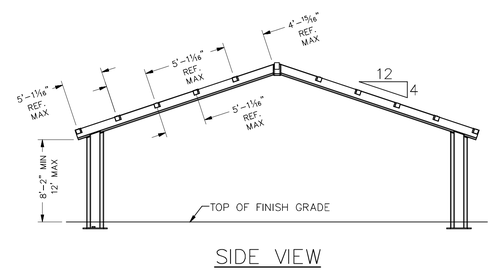

SIDE VIEW

**IF MULTI RIB ROOFING IS SELECTED ONLY (8) PURLINS ARE REQUIRED PER BAY

**IF MEGA RIB ROOFING IS SELECTED ONLY (8) PURLINS ARE REQUIRED PER BAY

**IF STANDING SEAM ROOFING IS SELECTED ADDITIONAL PURLINS ARE REQUIRED (10) PURLINS REQUIRED PER BAY

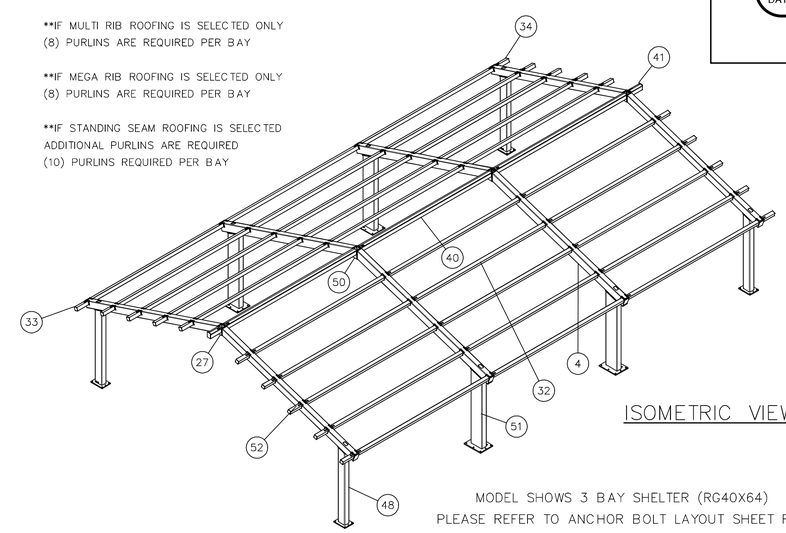

ISOMETRIC VIEW

MODEL SHOWS 3 BAY SHELTER (RG40X64)
PLEASE REFER TO ANCHOR BOLT LAYOUT SHEET FOR CORRECT COLUMN PLACEMENT BASED ON SIZE ORDERED

MODEL DESIGNATION	
RG40X24	1 BAY
RG40X44	2 BAY
RG40X64	3 BAY
RG40X84	4 BAY
RG40X104	5 BAY

40' WIDE RECTANGULAR GABLE FRAMING & CONNECTION DETAILS

ICON Shelter Systems Inc
DISTINCTIVE STEEL SHELTERS
WWW.ICONSHELTERS.COM

1455 LINCOLN AVE
HOLLAND MI, 49423
616.396.0919
800.748.0985
616.396.0944 FX

PRE-CHECK (PC) DOCUMENT
Code: 2022 CBC
A separate project application for construction is required.

LS4.1

S:\Engineering\Inventor\DSA 2022\PC 2022 RG DSA\40 F001\DSA RG40-PA.iam

PRINTED ON :

40' WIDE RECTANGULAR GABLE

NOTE: DETAILS TYPICAL FOR ALL LAYOUTS

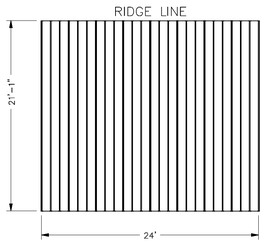

RG40X24M
(1 BAY)

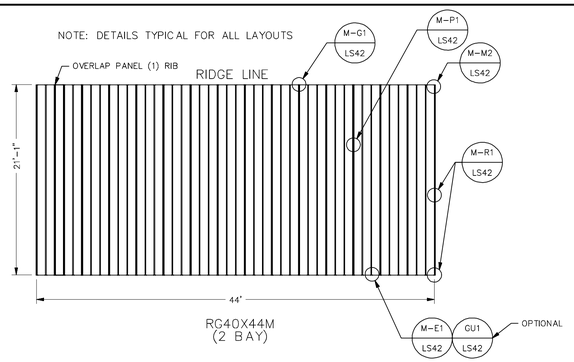

RG40X44M
(2 BAY)

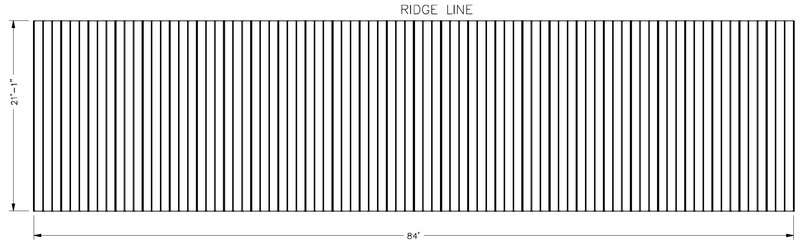

RG40X84M
(4 BAY)

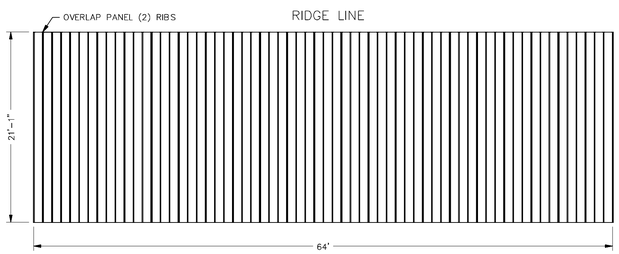

RG40X64M
(3 BAY)

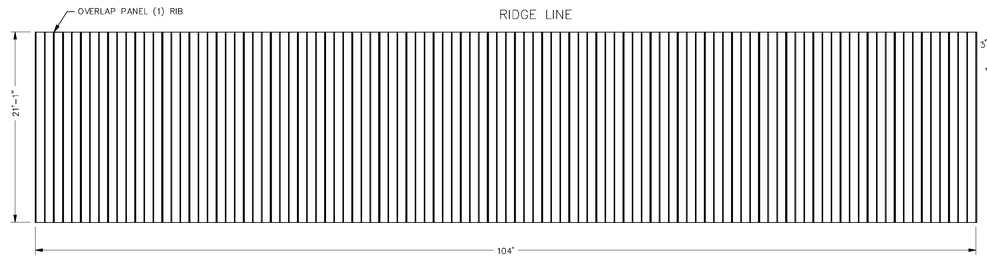

RG40X104M
(5 BAY)

FASTENER SCHEDULE @ PURLIN AND RIDGE BEAM

FASTENER SCHEDULE

NOT TO SCALE

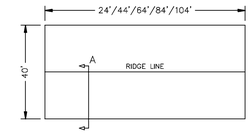

ROOF PLAN VIEW

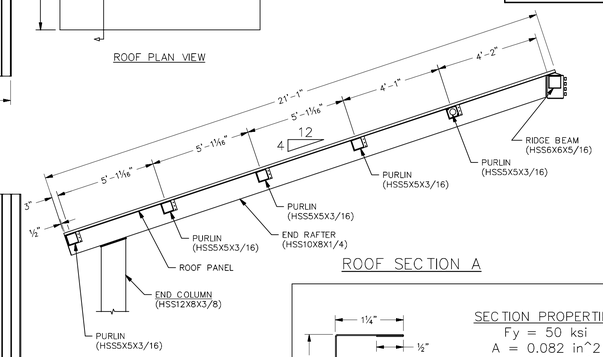

ROOF SECTION A

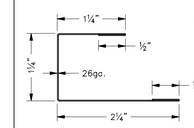

SECTION PROPERTIES
Fy = 50 ksi
A = 0.082 in^2
Ix = 0.029 in^4
Iy = 0.039 in^4
Sx = 0.019 in^3
Sy = 0.049 in^3

MULTI RIB EAVE TRIM (1)

40' WIDE RECTANGULAR GABLE MULTI RIB ROOFING

NOTE: STITCH OR LAP SCREWS ARE NOT REQUIRED ALONG THE RIB

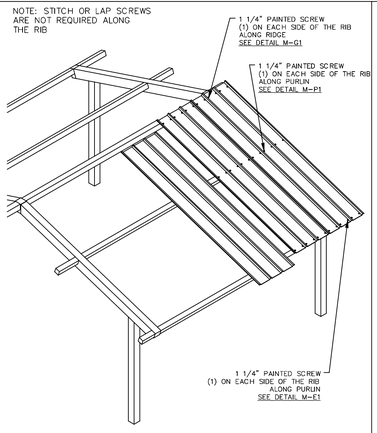

MULTI RIB ROOF INSTALLATION — ROOF

ORDER OF 26GA TRIM INSTALLATION

- PANEL END CAP 10' LONG SEE DETAIL M-G1
- EAVE TRIM 10' LONG W/ WEEP HOLES SEE DETAIL M-E1
- RAKE TRIM 10' LONG W/O WEEP HOLES SEE DETAIL M-R1
- RIDGE CAP 10' LONG SEE DETAIL M-G1
- EAVE CORNER TRIM 8" LONG (2) PER CORNER SEE DETAIL M-R1,M-M2

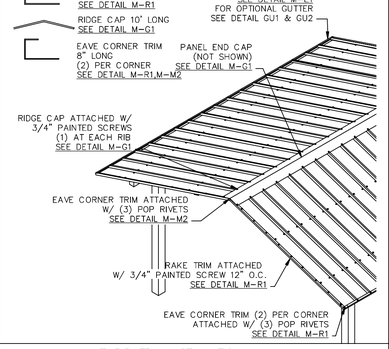

MULTI RIB TRIM INSTALLATION — TRIM

NOTE: SEE DETAILS GU1 AND GU2 IF INSTALLING OPTIONAL GUTTER SYSTEM

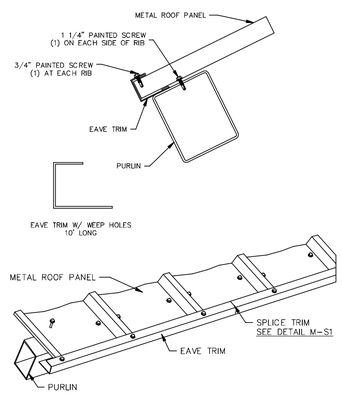

MULTI RIB ROOF EAVE CONNECTION DETAIL — M-E1

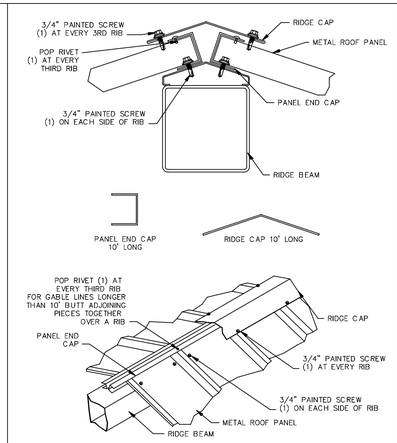

MULTI RIB ROOF CONNECTION AT RIDGE — M-G1

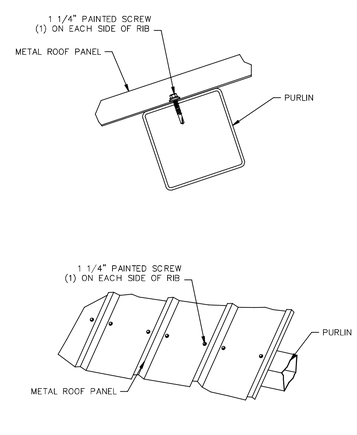

MULTI RIB ROOF CONNECTION AT PURLIN — M-P1

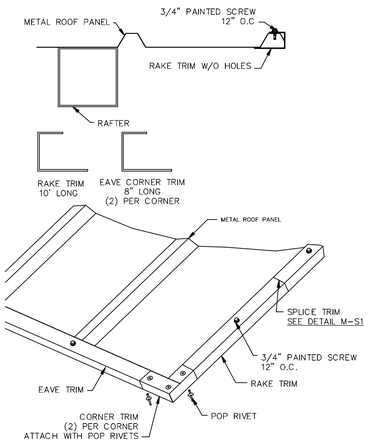

MULTI RIB ROOF CONNECTION AT RAKE — M-R1

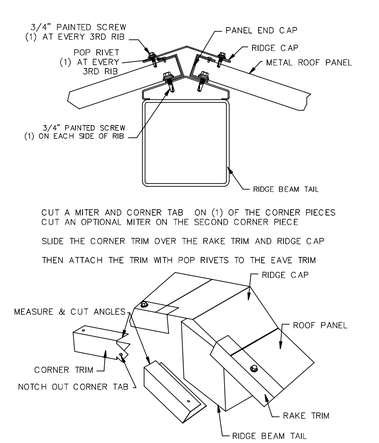

MULTI RIB ROOF CORNER CONNECTION DETAIL — M-M2

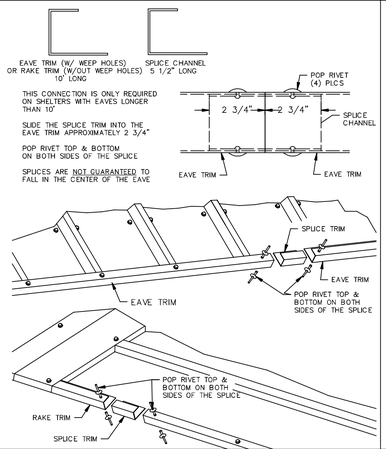

MULTI RIB ROOF SPLICE CONNECTION DETAIL — M-S1

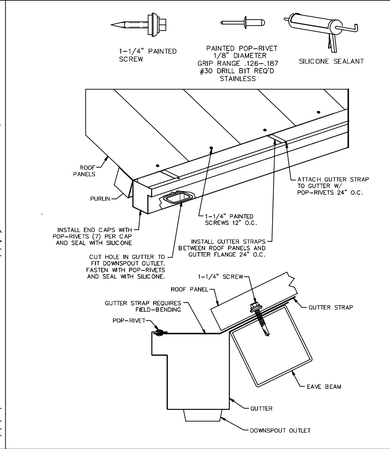

OPTIONAL GUTTER INSTALLATION
MULTI RIB ROOF — GU1

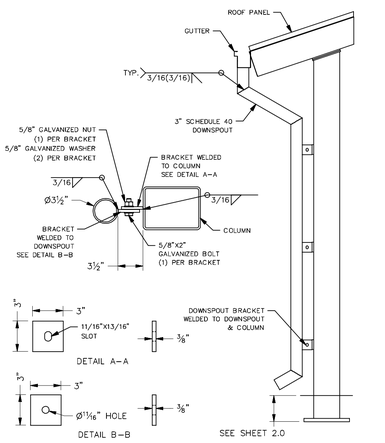

OPTIONAL GUTTER SECTION
MULTI RIB ROOF — GU2

ROOF NOTES

ATTENTION INSTALLERS:
METAL SHAVINGS LEFT ON ROOF WILL QUICKLY RUST AND STAIN THE ROOF FINISH!

DRILLING OR INSTALLING ROOF FASTENERS WILL CAUSE METAL SHAVINGS. THESE SHAVINGS MUST BE CAREFULLY REMOVED AT THE END OF EACH DAY BY EITHER SWEEPING OR BRUSHING THE INSTALLED ROOF.

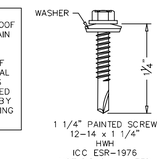

1 1/4" PAINTED SCREW
12-14 x 1 1/4"
HWH
ICC ESR-1976
HOT DIP GALVANIZED

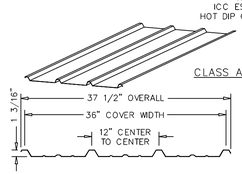

CLASS A ROOFING

MULTI RIB PANEL SECTION
24 ga. Fy=50 ksi Fu=65ksi
UES EVALUATION REPORT #270

SECTION PROPERTIES
(PER FT. OF WIDTH)

TOP IN COMPRESSION
Ix=0.050 in^4
Se=0.055 in^3
Ma=1.375 in-kips

BOTTOM IN COMPRESSION
Ix=0.029 in^4
Se=0.046 in^3
Ma=1.148 in-kips

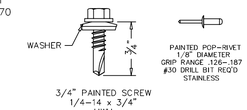

3/4" PAINTED SCREW
1/4-14 x 3/4"
HWH
ICC ESR-1976
HOT DIP GALVANIZED

INSTALLED CORRECTLY	INSTALLED TOO TIGHT	INSTALLED TOO LOOSE
THE SEALING MATERIAL SLIGHTLY VISIBLE AROUND THE METAL WASHER	THE SEALING MATERIAL IS DEFORMED BEYOND THE EDGE OF THE METAL WASHER	THE SEALING MATERIAL IS NOT VISIBLE AROUND THE EDGE OF THE METAL WASHER

THE ERECTOR SHOULD THOROUGHLY FAMILIARIZE THEMSELVES WITH ALL INSTALLATION INSTRUCTION MATERIAL BEFORE STARTING WORK.

THE PANELS SHOULD BE INSTALLED PLUMB, STRAIGHT, AND ACCURATELY TO THE ADJACENT WORK.

ERECTORS SHALL BE RESPONSIBLE TO ENSURE THAT THE DETAILS MEET PARTICULAR BUILDING REQUIREMENTS AND TO ASSURE ADEQUATE WATER TIGHTNESS.

FOR THE BEST APPEARANCE ALL TRIM AND FLASHING SHALL BE INSTALLED TRUE, AND IN PROPER ALIGNMENT, WITH ALL EXPOSED FASTENERS EQUALLY SPACED.

SOME FIELD CUTTING AND/OR FITTING OF PANELS, TRIM AND FLASHING IS TO BE EXPECTED BY THE ERECTOR. MINOR FIELD CORRECTIONS ARE PART OF NORMAL ERECTION WORK.

THE INSTALLATION SHALL BE PERFORMED BY EXPERIENCED METAL CRAFTSMEN AND WORKMANSHIP SHALL MEET THE BEST INDUSTRY STANDARDS.

PRE-CHECK (PC) DOCUMENT
Code: 2022 CBC
A separate project application for construction is required.

IDENTIFICATION STAMP
DIV. OF THE STATE ARCHITECT
APP: 02-121754 INC:
REVIEWED FOR
SS ☐ FLS ☐ ACS ☑
DATE: 02/21/2024

APPROVED
DIV. OF THE STATE ARCHITECT
APP: 04-122188 PC
REVIEWED FOR
SS ☑ FLS ☑ ACS ☑ CG ☐
DATE: 09/21/2023

ICON STD	RG/DSA-PC
DRAWN BY	JD
DATE	3/21/2023
REV	
REV DATE	

JRMA
ARCHITECTS ENGINEERS
2700 SATURN ST BREA, CA 92821
T. 714.524.1870 | F. 714.524.1875
WWW.JRMA.COM

REGISTERED PROFESSIONAL ENGINEER
JAMES D. WEBB
No. 29611
STRUCTURAL
STATE OF CALIFORNIA

Aug 31, 2023

40' WIDE
RECTANGULAR GABLE
MULTI RIB ROOFING
PLAN

ICON Shelter Systems Inc
DISTINCTIVE STEEL SHELTERS
WWW.ICONSHELTERS.COM

1455 LINCOLN AVE
HOLLAND MI, 49423

616.396.0919
800.748.0983
616.396.0944 FX

LS4.2

S:\Engineering\Inventor\Standard Parts\ROOF PARTS\EAVE TRIM.ipt

PRINTED ON :

NOTE: DETAILS TYPICAL FOR ALL LAYOUTS

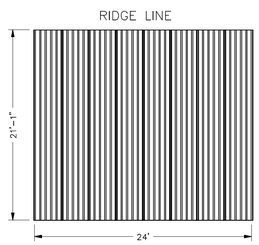

RG40X24G
(1 BAY)

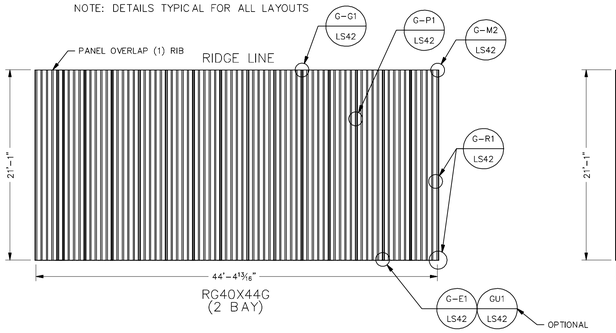

RG40X44G
(2 BAY)

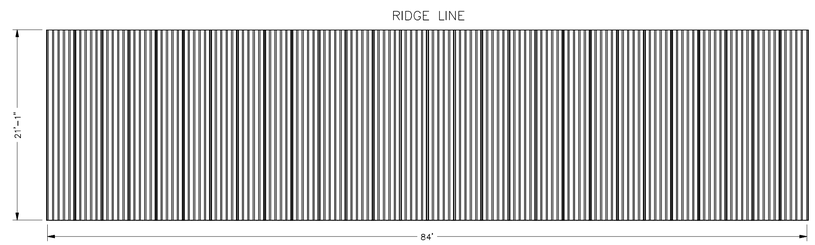

RG40X84G
(4 BAY)

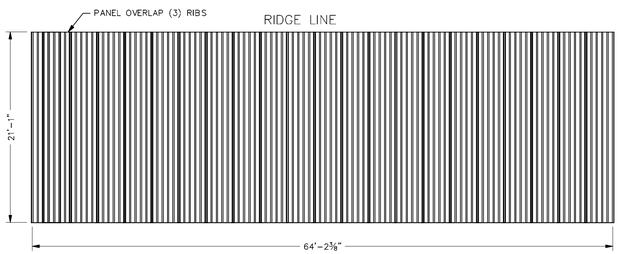

RG40X64G
(3 BAY)

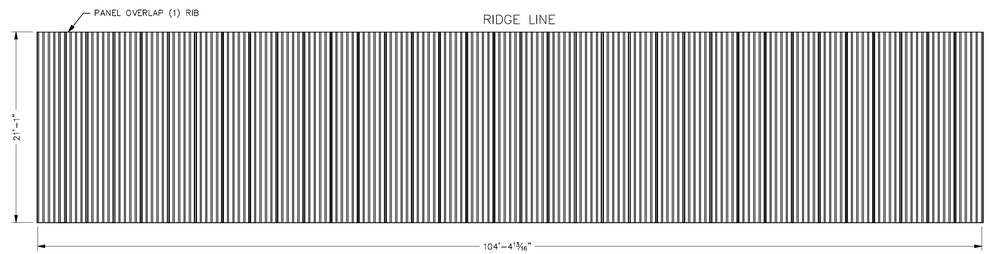

RG40X104G
(5 BAY)

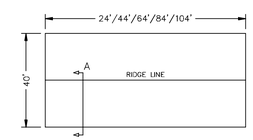

ROOF PLAN VIEW

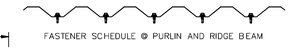

FASTENER SCHEDULE
NOT TO SCALE

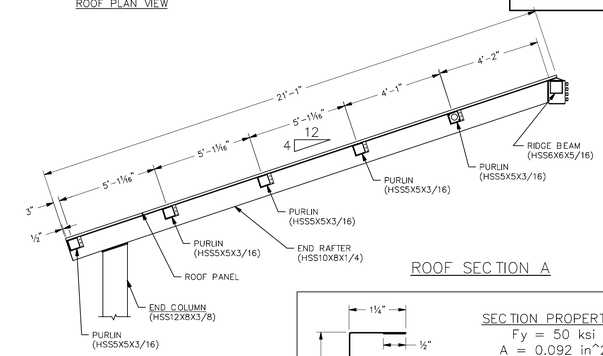

ROOF SECTION A

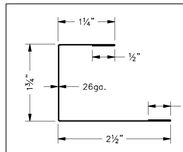

SECTION PROPERTIES
Fy = 50 ksi
A = 0.092 in^2
Ix = 0.028 in^4
Iy = 0.061 in^4
Sx = 0.024 in^3
Sy = 0.056 in^3

MULTI RIB EAVE TRIM 1

IDENTIFICATION STAMP
DIV. OF THE STATE ARCHITECT
APP: 02-121754 INC:
REVIEWED FOR
SS ☐ FLS ☐ ACS ☑
DATE: 02/21/2024

ICON STD	RG/DSA-PC
DRAWN BY	JD
DATE	3/21/2023
REV	
REV DATE	

JRMA
ARCHITECTS ENGINEERS
2700 SATURN ST BREA, CA 92821
T. 714.524.1870 F. 714.524.1875
WWW.JRMA.COM

REGISTERED PROFESSIONAL ENGINEER
JAMES D. WEST
STRUCTURAL
STATE OF CALIFORNIA

Aug 31, 2023

40' WIDE RECTANGULAR GABLE MEGA RIB ROOFING

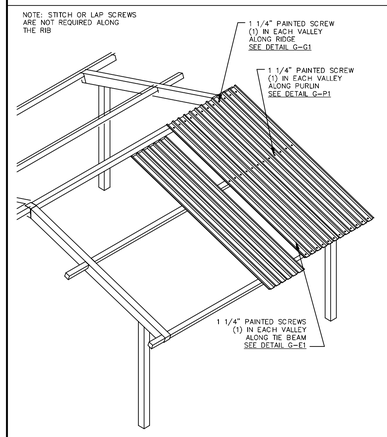

MEGA RIB ROOF INSTALLATION — ROOF

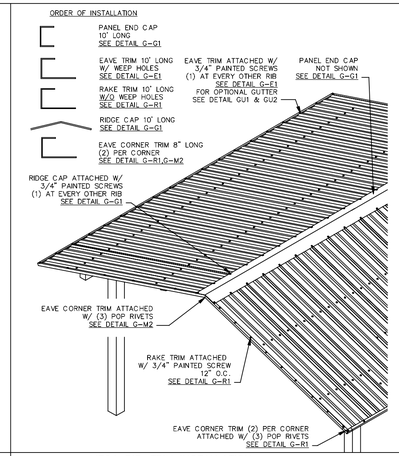

MEGA RIB TRIM INSTALLATION — TRIM

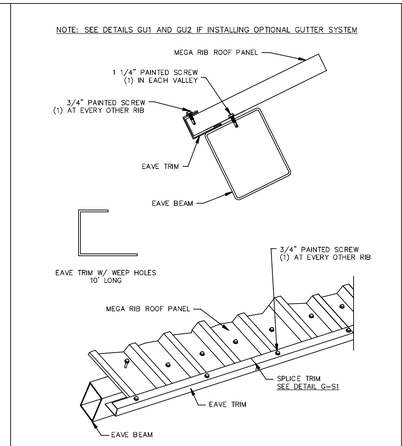

MEGA RIB ROOF EAVE CONNECTION DETAIL — G-E1

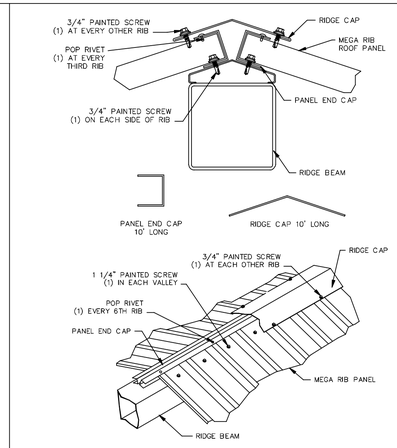

MEGA RIB ROOF CONNECTION AT RIDGE — G-G1

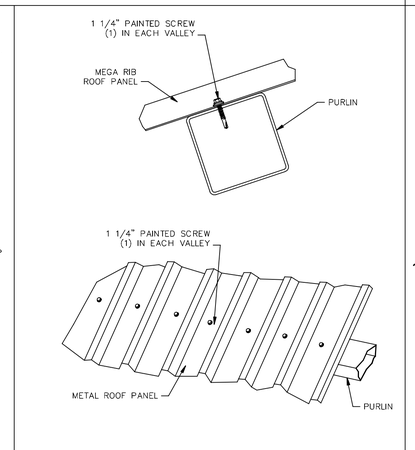

MEGA RIB ROOF CONNECTION AT PURLIN — G-P1

ROOF NOTES

ATTENTION INSTALLERS:
METAL SHAVINGS LEFT ON ROOF WILL QUICKLY RUST AND STAIN THE ROOF FINISH!

DRILLING OR INSTALLING ROOF FASTENERS WILL CAUSE METAL SHAVINGS. THESE SHAVINGS MUST BE CAREFULLY REMOVED AT THE END OF EACH DAY BY EITHER SWEEPING OR BRUSHING THE INSTALLED ROOF.

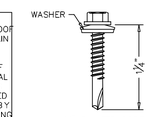

1 1/4" PAINTED SCREW
12-14 x 1 1/4"
HWH
ICC ESR-1976
HOT DIP GALVANIZED

CLASS A ROOFING

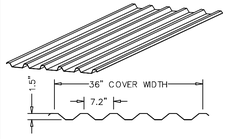

MEGA RIB PANEL SECTION
24 ga. Fy=50 ksi Fu=65 ksi
UES EVALUATION REPORT #270

PAINTED POP-RIVET
1/8" DIAMETER
GRIP RANGE .126-.187
#30 DRILL BIT REQ'D
STAINLESS

SECTION PROPERTIES
(PER FT. OF WIDTH)

TOP IN COMPRESSION
Ix=0.091 in^4
Se=0.1098 in^3
Ma=2.7433 in-kips

BOTTOM IN COMPRESSION
Ix=0.089 in^4
Se=0.0973 in^3
Ma=2.430 in-kips

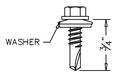

3/4" PAINTED SCREW
1/4-14 x 3/4"
HWH
ICC ESR-1976
HOT DIP GALVANIZED

INSTALLED CORRECTLY	INSTALLED TOO TIGHT	INSTALLED TOO LOOSE
THE SEALING MATERIAL SLIGHTLY VSIBLE AROUND THE METAL WASHER	THE SEALING MATERIAL IS DEFORMED BEYOND THE EDGE OF THE METAL WASHER	THE SEALING MATERIAL IS NOT VSIBLE AROUND THE EDGE OF THE METAL WASHER

THE ERECTOR SHOULD THOROUGHLY FAMILIARIZE THEMSELVES WITH ALL INSTALLATION INSTRUCTION MATERIAL BEFORE STARTING WORK.

THE PANELS SHOULD BE INSTALLED PLUMB, STRAIGHT, AND ACCURATELY TO THE ADJACENT WORK.

ERECTORS SHALL BE RESPONSIBLE TO ENSURE THAT THE DETAILS MEET PARTICULAR BUILDING REQUIREMENTS AND TO ASSURE ADEQUATE WATER TIGHTNESS.

FOR THE BEST APPEARANCE ALL TRIM AND FLASHING SHALL BE INSTALLED TRUE, AND IN PROPER ALIGNMENT, WITH ALL EXPOSED FASTENERS EQUALLY SPACED.

SOME FIELD CUTTING AND/OR FITTING OF PANELS, TRIM AND FLASHING IS TO BE EXPECTED BY THE ERECTOR. MINOR FIELD CORRECTIONS ARE PART OF NORMAL ERECTION WORK.

THE INSTALLATION SHALL BE PERFORMED BY EXPERIENCED METAL CRAFTSPERSON AND WORKMANSHIP SHALL MEET THE BEST INDUSTRY STANDARDS.

APPROVED
DIV. OF THE STATE ARCHITECT
APP: 04-122188 PC
REVIEWED FOR
SS ☑ FLS ☑ ACS ☑ CG ☐
DATE: 09/21/2023

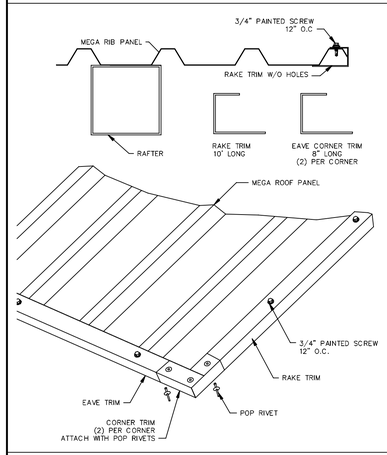

MEGA RIB CONNECTION AT RAKE — G-R1

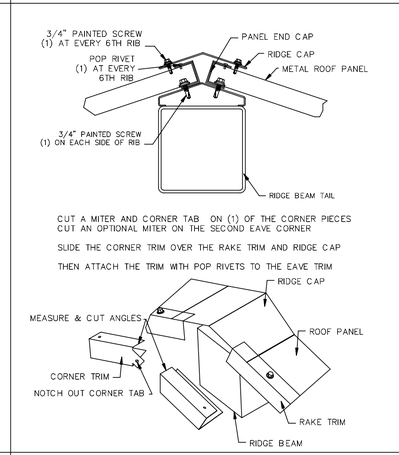

MEGA RIB ROOF CORNER CONNECTION DETAIL — G-M2

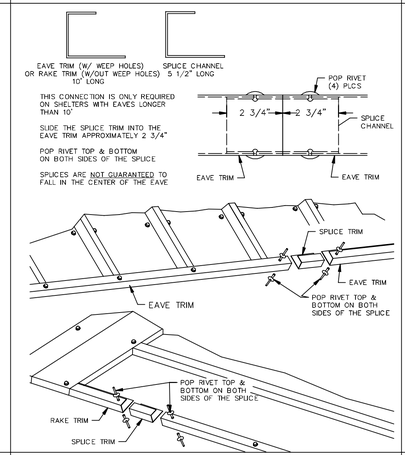

MEGA RIB ROOF SPLICE CONNECTION DETAIL — G-S1

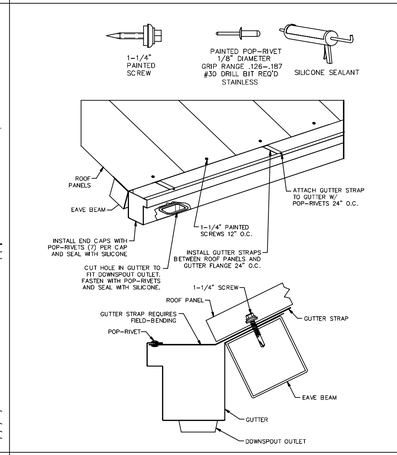

OPTIONAL GUTTER INSTALLATION
MEGA RIB ROOF — GU1

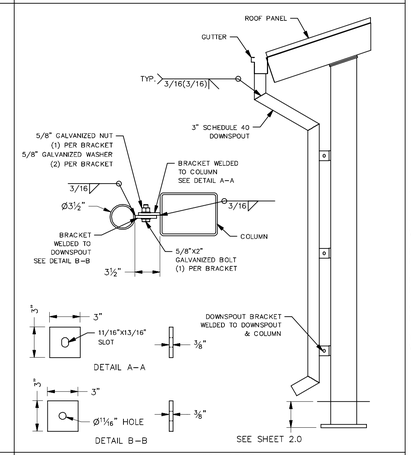

OPTIONAL GUTTER SECTION
MEGA RIB ROOF — GU2

40' WIDE
RECTANGULAR GABLE
MEGA RIB ROOFING
PLAN

ICON Shelter Systems Inc
DISTINCTIVE STEEL SHELTERS
WWW.ICONSHELTERS.COM

1455 LINCOLN AVE
HOLLAND MI, 49423
616.396.0919
800.748.0985
616.396.0944 FX

PRE-CHECK (PC) DOCUMENT
Code: 2022 CBC
A separate project application for construction is required.

LS4.3

S:\Engineering\Inventor\Standard Parts\ROOF PARTS\MEGA EAVE TRIM.ipt

PRINTED ON :

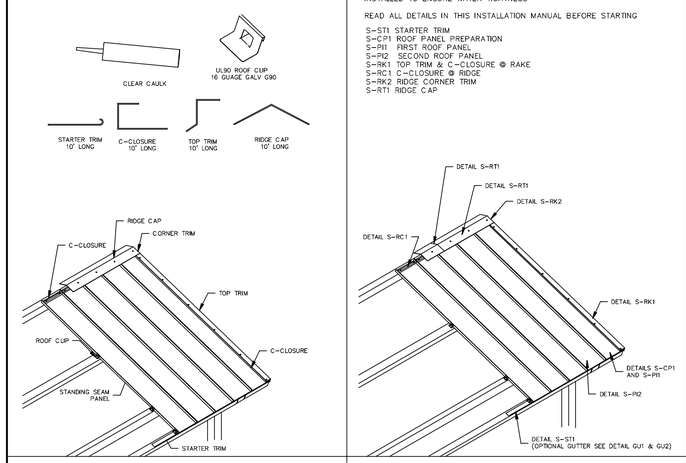

TRIM REFERENCE

THESE DETAILS ASSUME THAT ALL COMPONENTS OF THIS ROOF SYSTEM WILL BE INSTALLED PLUMB AND SQUARE. CAULK AND TRIM SHOULD ALSO BE INSTALLED TO ENSURE WATER TIGHTNESS

READ ALL DETAILS IN THIS INSTALLATION MANUAL BEFORE STARTING

S-ST1 STARTER TRIM
S-CP1 ROOF PANEL PREPARATION
S-PI1 FIRST ROOF PANEL
S-PI2 SECOND ROOF PANEL
S-RK1 TOP TRIM & C-CLOSURE @ RAKE
S-RC1 C-CLOSURE @ RIDGE
S-RK2 RIDGE CORNER TRIM
S-RT1 RIDGE CAP

ORDER OF INSTALLATION

INSTALL STARTER TRIM OVERHANGING THE EDGE OF THE EAVE PURLIN 1/2". ATTACH STARTER TRIM WITH 1 1/2" PANCAKE HEAD SCREWS 12" O.C.

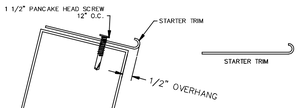

NOTE: SEE DETAILS GU1 AND GU2 IF INSTALLING OPTIONAL GUTTER SYSTEM

STARTER INSTALLATION S-ST1

MEASURE, MARK & CUT THE FIRST ROOF PANEL

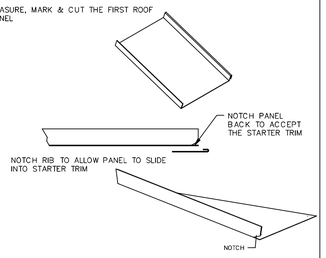

FIELD CUTTING ROOF PANELS S-CP1

AFTER THE ROOF PANEL HAS BEEN CUT TO SIZE (IF NECESSARY) AND NOTCHED, TEST FIT THE PANEL. THEN APPLY A BEAD OF CAULK THE APPROXIMATE LENGTH OF THE PANEL. SLIDE THE PANEL INTO PLACE, AND SQUARE IT UP TO THE ROOF.

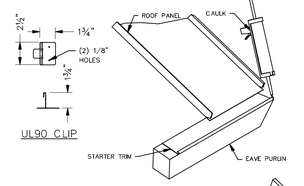

WITH THE ROOF PANEL IN PLACE AND SQUARE, INSTALL THE ROOF CLIPS WITH (2) 1 1/2" PANCAKE HEAD SCREWS.

ROOF CLIPS ARE INSTALLED AT EVERY CROSS MEMBER (EXCEPT RIDGE BEAM)

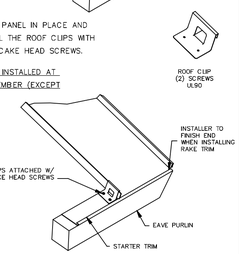

INSTALLATION OF FIRST ROOF PANEL S-PI1

AFTER THE SECOND ROOF PANEL HAS BEEN CUT TO LENGTH (IF NECESSARY) AND NOTCHED, TEST FIT PANEL. THEN APPLY A BEAD OF CAULK INSIDE THE STARTER TRIM. SLIDE THE SECOND ROOF PANEL IN PLACE AND SNAP IT OVER THE BATTEN OF THE FIRST PANEL

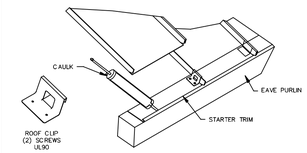

WITH THE SECOND ROOF PANEL IN PLACE AND SQUARE, INSTALL THE ROOF CLIPS WITH (2) 1 1/2" PANCAKE HEAD SCREWS.
REPEAT THIS STEP UNTIL ALL ROOF PANELS ARE INSTALLED
ROOF CLIPS ARE INSTALLED AT EVERY PURLIN

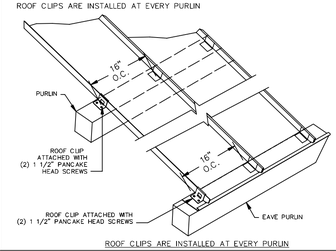

ROOF CLIPS ARE INSTALLED AT EVERY PURLIN

INSTALLATION OF SECOND ROOF PANEL S-PI2

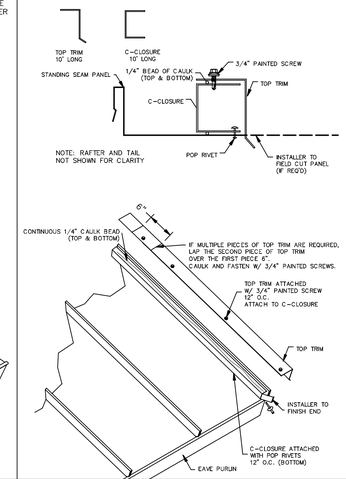

TOP TRIM INSTALLATION @ RAKE S-RK1

ROOF NOTES

ATTENTION INSTALLERS:
METAL SHAVINGS LEFT ON ROOF WILL QUICKLY RUST AND STAIN THE ROOF FINISH!

DRILLING OR INSTALLING ROOF FASTENERS WILL CAUSE METAL SHAVINGS. THESE SHAVINGS MUST BE CAREFULLY REMOVED AT THE END OF EACH DAY BY EITHER SWEEPING OR BRUSHING THE INSTALLED ROOF.

INSTALLED CORRECTLY	INSTALLED TOO TIGHT	INSTALLED TOO LOOSE
THE SEALING MATERIAL SLIGHTLY VISIBLE AROUND THE METAL WASHER	THE SEALING MATERIAL IS DEFORMED BEYOND THE EDGE OF THE METAL WASHER	THE SEALING MATERIAL IS NOT VISIBLE AROUND THE EDGE OF THE METAL WASHER

THE ERECTOR SHOULD THOROUGHLY FAMILIARIZE THEMSELVES WITH ALL INSTALLATION INSTRUCTION MATERIAL BEFORE STARTING WORK.

THE PANELS SHOULD BE INSTALLED PLUMB, STRAIGHT, AND ACCURATELY TO THE ADJACENT WORK.

ERECTORS SHALL BE RESPONSIBLE TO ENSURE THAT THE DETAILS MEET PARTICULAR BUILDING REQUIREMENTS AND TO ASSURE ADEQUATE WATER TIGHTNESS.

FOR THE BEST APPEARANCE ALL TRIM AND FLASHING SHALL BE INSTALLED TRUE, AND IN PROPER ALIGNMENT, WITH ALL EXPOSED FASTENERS EQUALLY SPACED.

SOME FIELD CUTTING AND/OR FITTING OF PANELS, TRIM AND FLASHING IS TO BE EXPECTED BY THE ERECTOR. MINOR FIELD CORRECTIONS ARE PART OF NORMAL ERECTION WORK.

THE INSTALLATION SHALL BE PERFORMED BY EXPERIENCED METAL CRAFTSPERSON AND WORKMANSHIP SHALL MEET THE BEST INDUSTRY STANDARDS.

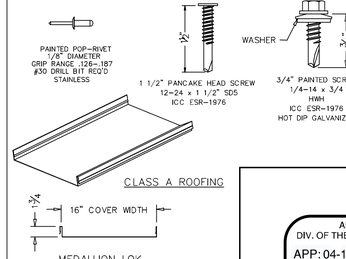

CLASS A ROOFING

MEDALLION LOK
STANDING SEAM PANEL SECTION
24 ga. Fy=50 ksi Fu=65 ksi
ICC ESL-1082

SECTION PROPERTIES
(PER FT. OF WIDTH)

TOP IN COMPRESSION
Ix=0.0848 in^4
Se=0.0565 in^3
Ma=1.4115 in-kips

BOTTOM IN COMPRESSION
Ix=0.0390 in^4
Se=0.0476 in^3
Ma=1.0305 in-kips

IDENTIFICATION STAMP
DIV. OF THE STATE ARCHITECT
APP: 02-121754 INC:
REVIEWED FOR
SS ☐ FLS ☐ ACS ☑
DATE: 02/21/2024

ICON STD	RG/DSA-PC
DRAWN BY	JD
DATE	3/21/2023
REV	
REV DATE	

JRMA
ARCHITECTS ENGINEERS
2700 SATURN ST BREA, CA 92821
T.714.524.1870 F.714.524.1875
WWW.JRMA.COM

REGISTERED PROFESSIONAL ENGINEER
STATE OF CALIFORNIA
Aug 31, 2023

TO INSTALL C-CLOSURES ALONG THE RIDGE MEASURE, MARK & CUT THE C-CLOSURE TO LENGTH.

APPLY A 1/4" BEAD OF CAULK TO THE BOTTOM OF THE C-CLOSURE AND FASTEN IT TO THE ROOF WITH (2) 3/4" PAINTED SCREWS (12" O.C. MAX CENTERED ON EACH PANEL) ALONG THE RIDGE BEAM. THEN APPLY CAULK TO THE END OF THE C-CLOSURE FOR WATER TIGHTNESS

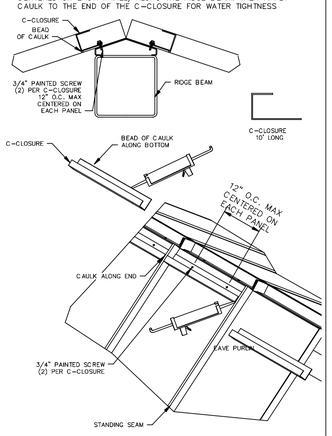

INSTALLATION OF C-CLOSURE @ RIDGE S-RC1

TO FINISH OFF THE END OF THE RIDGE, CUT THE TOP TRIM AS SHOWN.

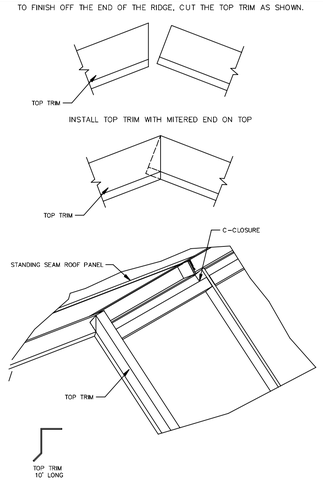

INSTALLATION OF CORNER TRIM S-RK2

TO INSTALL RIDGE CAP:
FIRST APPLY A BEAD OF CAULK ALONG THE TOP OF THE C-CLOSURES

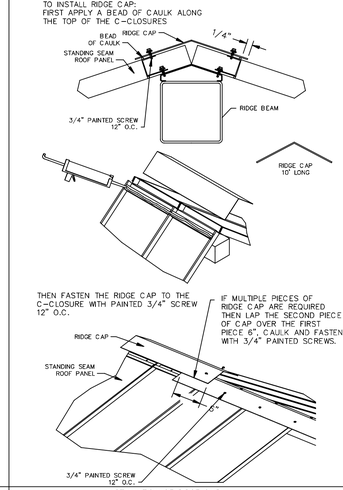

INSTALLATION OF RIDGE CAP S-RT1

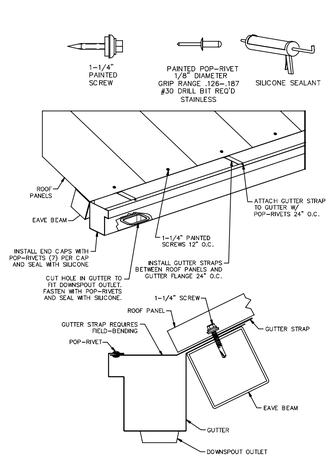

OPTIONAL GUTTER INSTALLATION
STANDING SEAM ROOF GU1

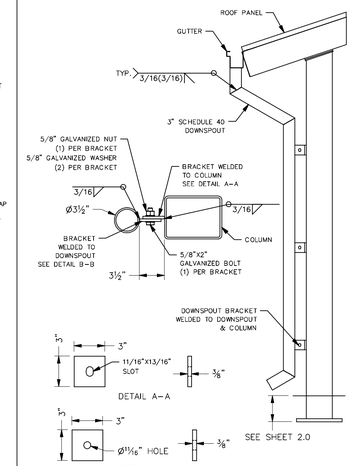

OPTIONAL GUTTER SECTION
STANDING SEAM ROOF GU2

40' WIDE RECTANGULAR GABLE STANDING SEAM ROOFING

NOTE: DETAILS TYPICAL FOR ALL LAYOUTS

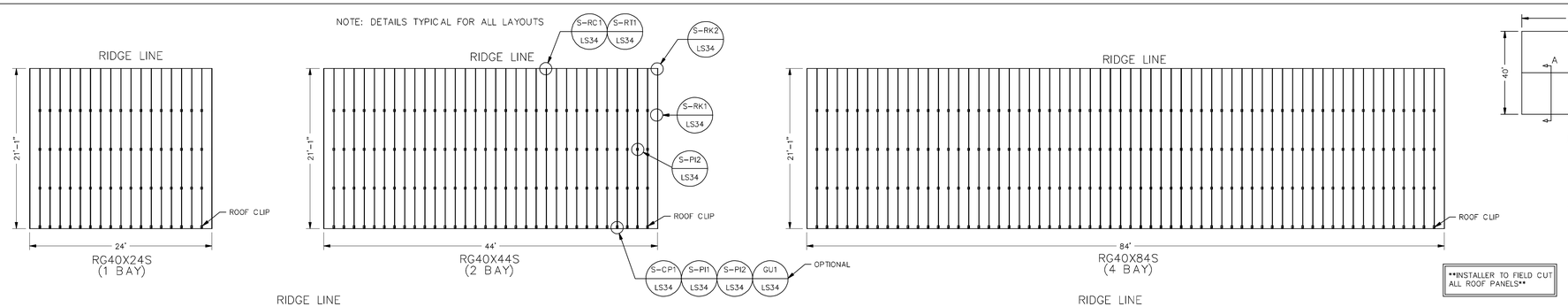

INSTALLER TO FIELD CUT ALL ROOF PANELS

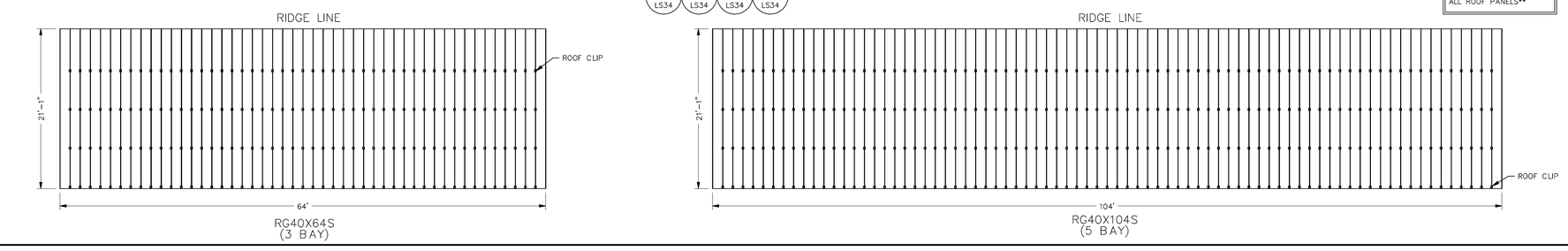

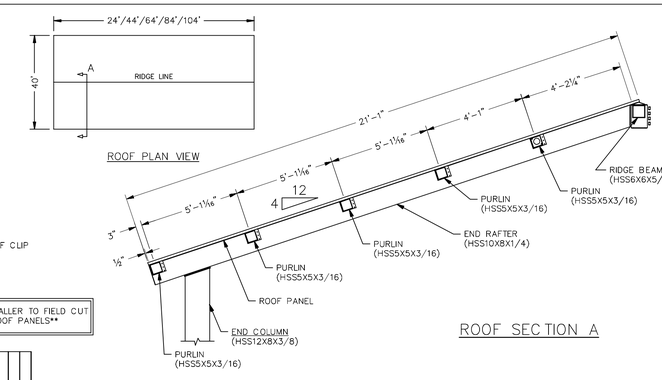

ROOF SECTION A

APPROVED
DIV. OF THE STATE ARCHITECT
APP: 04-122188 PC
REVIEWED FOR
SS ☑ FLS ☑ ACS ☑ CG ☐
DATE: 09/21/2023

40' WIDE RECTANGULAR GABLE STANDING SEAM ROOFING PLAN

ICON Shelter Systems Inc
DISTINCTIVE STEEL SHELTERS
WWW.ICONSHELTERS.COM

1455 LINCOLN AVE
HOLLAND MI, 49423

616.396.0919
800.748.0985
616.396.0944 FX

PRE-CHECK (PC) DOCUMENT
Code: 2022 CBC
A separate project application for construction is required.

LS4.4

S:\Engineering\Inventor\DSA 2019\PC 2019 RG DSA\ROOF\40 FOOT WIDE ROOF\24 FOOT SS ROOF.iam

PRINTED ON :

ELECTRICAL INFORMATION - RECTANGULAR GABLE

ICON'S STANDARD ELECTRICAL IS DESIGNED TO ACCOMMODATE Ø1/2" CONDUIT WITH A Ø3" INLET HOLE ON THE BOTTOM OF EACH COLUMN. THE CONDUIT PATHWAY RUNS THROUGH THE COLUMN, RAFTER, AND RIDGE BEAM THROUGH ALL BOLTED CONNECTIONS AS SHOWN. IF YOU HAVE SPECIAL ELECTRICAL REQUIREMENTS, PLEASE OUTLINE ANY CHANGES BELOW AS DESCRIBED.

PLEASE NOTE: DESIGN LIMITATIONS ON HOLE/CUTOUT SIZES MAY APPLY. ICON WILL REACH OUT TO DISCUSS ANY SUCH LIMITATIONS AS NEEDED.

NOTE: ICON SHELTER FRAME IS NOT UL LISTED TO ACT AS A CONDUIT FOR ELECTRICAL WIRING. CONSULT LOCAL BUILDING CODES WHEN PLANNING YOUR ELECTRICAL SYSTEM.

STEPS:

1. **CONDUIT HOLE SIZE (DETAIL A)**
2. **ELECTRICAL EXIT HOLES (DETAIL B)**
3. **ELECTRICAL ACCESS & COVER PLATES (DETAIL C)**
4. **ELECTRICAL CONDUIT PATHWAY (DETAIL D)**

☐ IF REQUIRED, PLEASE DRAW THE NECESSARY ELECTRICAL CONDUIT PATHWAY ON THE FRAME SHEET REQUIRED FOR BUILDING SIZE (LS2.1, LS3.1 & LS4.1)

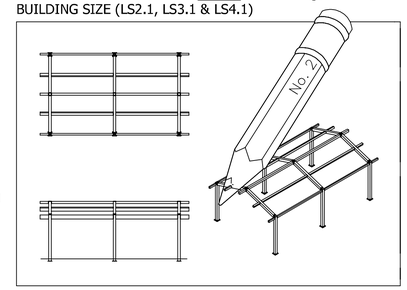

DETAIL D

OPTIONAL EXIT HOLES

IF REQUIRED, EXIT HOLES FOR LIGHTING, ETC. CAN BE PLACED IN THE RIDGE BEAM AND/OR CONNECTOR TUBE WITH 14ga COVER PLATE AS SHOWN (CHARGES APPLY) USE FRAME SHEET OF THIS PRELIMINARY TO SPECIFY REQUIRED EXIT HOLE LOCATIONS AND SIZES.

(1) EXIT HOLE PER CONNECTOR
(2) EXIT HOLES PER RIDGE BEAM

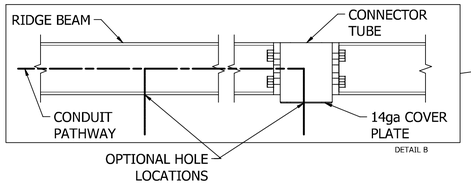

DETAIL B

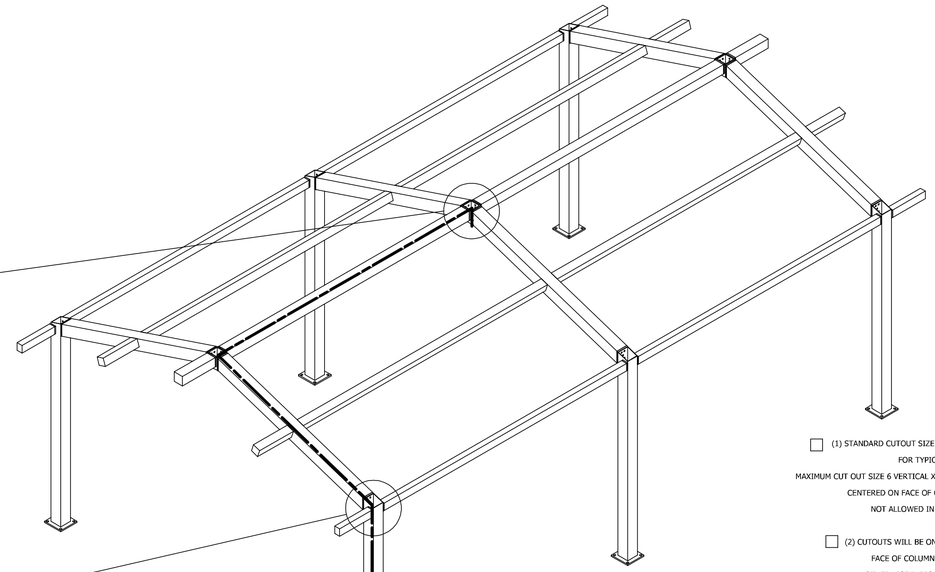

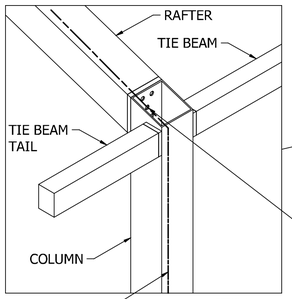

DETAIL A

ICON PROVIDES A MINIMUM OF (1) 3/4" HOLE AT EACH CONNECTION FOR 1/2" CONDUIT. IF APPLICABLE, PLEASE SPECIFY REQUIRED CONDUIT SIZE: (CHARGES APPLY)

☐ 3/4" CONDUIT (1" HOLES)
☐ 1" CONDUIT (1 1/4" HOLES)

CONDUIT PATHWAY PROVIDED FOR EACH COLUMN.

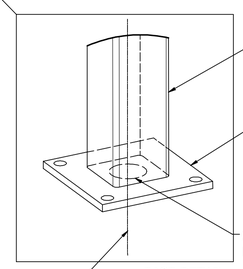

BASE DETAIL

CONDUIT (NOT BY ICON)

PROVIDE GROUNDING PER CEC ARTICLE 250

OPTIONAL CUTOUTS

USE FRAME SHEET OF THIS PRELIMINARY TO SPECIFY REQUIRED CUTOUT LOCATIONS (CHARGES APPLY)
SEE REQUIRED INFO BELOW

☐ (1) STANDARD CUTOUT SIZE SHOWN FOR TYPICAL GFCI
MAXIMUM CUT OUT SIZE 6 VERTICAL X 4 WIDE
CENTERED ON FACE OF COLUMN
NOT ALLOWED IN 6" FACE

☐ (2) CUTOUTS WILL BE ON INSIDE FACE OF COLUMN UNLESS OTHERWISE INDICATED ON FRAME SHEET.

☐ (3) SPECIFY HEIGHT ABOVE FINISHED GRADE FOR EACH CUTOUT AS SHOWN
18" MIN. FROM TOP OF FINISHED GRADE

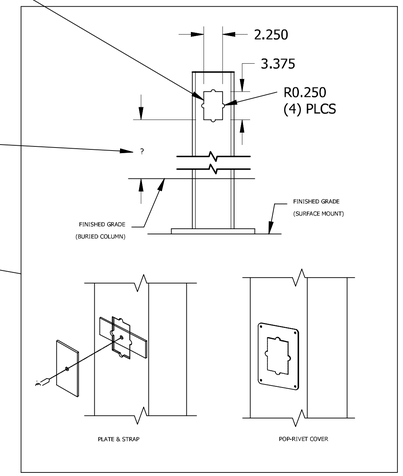

DETAIL C

(4) COVER PLATES PROVIDED UPON REQUEST (CHARGES APPLY)
PLEASE SPECIFY TYPE AND QUANTITY REQUIRED:

☐ PLATE & STRAP
☐ POP-RIVET COVER PLATE (STAINLESS POP RIVET)
HOW MANY REQUIRED?_____

NOTE: BUILDING DEPICTED ON THIS SHEET FOR ILLUSTRATION PURPOSES ONLY. ACTUAL LAYOUT AND FRAME MEMBER QUANTITIES VARY BY DESIGN. PLEASE REFER TO ELEVATION AND FRAME SHEETS IN THIS PC FOR ORDER-SPECIFIC CONFIGURATION.

IDENTIFICATION STAMP
DIV. OF THE STATE ARCHITECT
APP: 02-121754 INC:
REVIEWED FOR
SS ☐ FLS ☐ ACS ☑
DATE: 02/21/2024

ICON STD	RG/DSA-PC
DRAWN BY	JD
DATE	3/21/2023
REV	
REV DATE	

JRMA
ARCHITECTS ENGINEERS
2700 SATURN ST I BREA, CA 92821
T. 714.524.1870 I F. 714.524.1875
WWW.JRMA.COM

Aug 31, 2023

APPROVED
DIV. OF THE STATE ARCHITECT
APP: 04-122188 PC
REVIEWED FOR
SS ☑ FLS ☑ ACS ☑ CG ☐
DATE: 09/21/2023

OPTIONAL ELECTRICAL ACCESS

ICON Shelter Systems Inc
DISTINCTIVE STEEL SHELTERS
WWW.ICONSHELTERS.COM

1455 LINCOLN AVE
HOLLAND MI, 49423

616.396.0919
800.748.0985
616.396.0944 FX

PRE-CHECK (PC) DOCUMENT
Code: 2022 CBC
A separate project application for construction is required.

LS5.0

PRINTED ON :